User's Manual

LMV-F400D Milling Machine
CNC Milling Certification Cart

Contact Information

Address: 1704 Kennedy Point
Ste 1124
Oviedo, FL 32765

Telephone: 407-542-3971

Fax: 407-542-3971

e-mail: info@levil.com

Technical Support: Monday to Friday 10:00am – 5:00pm Eastern (EST)

Notes:

Updated wiring diagrams 2020

Table of Contents:

1. General 4

I. Introduction 4

II. Safety Precautions 4

III. Warm Up 5

IV. Coolant 6

V. Treatment of Waste 6

2. Machine Specifications 7

I. General Specifications 7

II. Dimensional Drawings 8

III. Working Space Required 9

IV. Caution Labels on the Machine 10

V. Machine Specifications 11

VI. Standard Accessories 12

VII. Optional Accessories 12

VIII. Layout of Tool Racks 13

IX. Power Specifications 14

X. Optional Tool Shank and Pull Stud 15

XI. Axis movement 16

3. Machine Installation 17

I. General Preparation & Selecting Location 17

II. Foundation and Layout 18

III. Installation Procedure 19

IV. Checkups during the Test Run 20

V. Relocation of the Machine 21

4. Operation 22

I. Overview of the Operator Interface 22

II. Overview of Machine Operator Panel Functions 23

III. G-codes and M-codes 30

IV. Keep Relays 33

V. Machine Start Up and Shut Down Procedure 33
VI. Loading files into the CNC using a USB drive 35
VII. Automatic Operation 36
VIII. Outputting programs from the CNC into a USB drive 39
IX. Deleting programs from the CNC memory 40
X. Spindle Operation 41
XI. Setting the Work-piece Coordinate System 44
XII. Setting Tool Length Offsets 46
XIII. Automatic Tool Change Operations 47
XIV. Coolant System Operation 49

5. Maintenance 50

I. APC warning and "DS0300 APC alarm: Need Ref Return" 50
II. Referencing the Tool Rack Home Position 54
III. Ball Screw Lubrication Procedure 56
IV. Linear Guide Way Lubrication Procedure 57
V. Servo Adjustment 58
VI. Cleaning the Machine 59
VII. Coolant system 60
VIII. Wiring Diagrams 61

1. General

I. Introduction

This manual specifies the proper maintenance and operation of the CNC Certification Cart. It benefits both experienced and beginner CNC machine operators and should be read thoroughly by all users.

All guidelines included in this manual should be studied and understood to ensure the safety of the operator and to prevent any substantial damage to the machine.

II. Safety Precautions

1) Operators should not touch any high-voltage terminals such as those found in control panels, transformers, motors, or junction boxes. Severe electric shock will be sustained otherwise. Electric shock may also result from touching a switch with wet hands.
2) The emergency stop button's location should be well known so that it can be pressed as soon as possible in case a critic situation.
3) Power off the machine before switching a fuse.
4) Do not operate this machine during violent thunderstorms. Lightning can cause equipment failure
5) Do not work with long hair that can be caught in the machine, keep it out of the way with a net or by tying it at the back.
6) Provide enough working space around the machine to avoid falls.
7) Since water and oil can make the floor slippery, all floors should be kept clean and dry.
8) Never touch a switch accidentally. If operating a switch, make sure it is the right one.
9) Do not handle coolant with bare hands since it may cause some irritation.
10) Do not remove or tamper with safety devices such as stop dogs, limit switched, or interlocks in order to increase the range of axis travel.
11) Keep a fire extinguisher at hand in case of fire or explosion due to cutting flammable materials. Please ask your material provider for safety guidelines when cutting volatile materials.
12) Hold work-pieces securely with a clamp.

13) Stop the machine before adjusting the coolant nozzle tip.
14) To remove a work-piece from the machine, stop the spindle and provide plenty of space from the work-piece to the tool.
15) Do not operate the machine with the safety front door open.
16) Stop the machine before installing or removing a tool.
17) Never wear loose or baggy clothing when operating the machine.
18) Never operate the machine under the influence of alcohol or any other drug.
19) The operator should wear safety glasses to avoid flying debris or coolant from making contact with his/her eyes.
20) Keep the machine clean. Do not let too many metal chips accumulate in the work area.
21) Check the chip filter in the coolant tank, if too many chips accumulate, the coolant will overflow and leak on the ground, resulting in a slip hazard.
22) Before leaving the machine at the end of the day, press the emergency button, turn off the power button, and the main switch on the back of the machine.

III. Warm Up

1) Every day before use, warm up the machine by turning on the spindle for 10 to 20 minutes at about 1500-3000 rpm. Failure to do so may result in a shorter lifespan of the spindle bearings.
2) If the machine is used right after being started, following a long idle period, sliding parts may wear down due to lack of even lubrication. Furthermore, thermal expansion of the machine components may jeopardize machining accuracy. To prevent these outcomes, always warm up the machine before daily operation by moving each axis through their entire travel at 50% of the machine's rapid speed for 10 minutes.
3) The mill warm up program is included with every machine to run the spindle and servos to the specified amounts.

IV. Coolant

1) Use water-soluble coolant. If oil-based coolant is used, the coolant temperature will rise, causing thermal distortion of the machine. Oil-based coolants are also flammable so more care must be taken to avoid fires.
2) Make sure that the coolant used has no adverse effects on the human body. Since water-based coolants often cause poisoning, pay attention to the hygiene of the operator.
3) Make sure that the coolant does not cause curing or expansion of rubber or plastic products, or chemical products.
4) Make sure to maintain the water-soluble coolant at the right concentration. Otherwise, tooling life may be shortened and rusting of machine components may occur.

V. Treatment of Waste

1) Deposit metal chips and scraps in a bucket. Appoint a local qualified scrap metal company to dispose of it.
2) Store waste coolant and lubricant in separate containers to be disposed of by some qualified recycling or sewage treatment company.

2. Machine Specifications

I. General Specifications

1) Status Tower Light	12) Upper Electronics Bay Cover
2) Control Panel Enclosure	13) Curtain Assembly
3) Main Enclosure	14) Main Enclosure Top Cover
4) Access Door	15) Control Enclosure Back Cover
5) Battery Case Access Door	16) Embedded Ethernet Connector
6) Coolant Power Connection	17) Main Power Cable
7) Machine Legs	18) X-Axis Servo Motor
8) Coolant Return Connection	19) Compressed Air Connection
9) Side Window	20) Z-Axis Servo Motor
10) Machine Information Placard	21) Main Power Switch
11) Y-Axis servo motor	

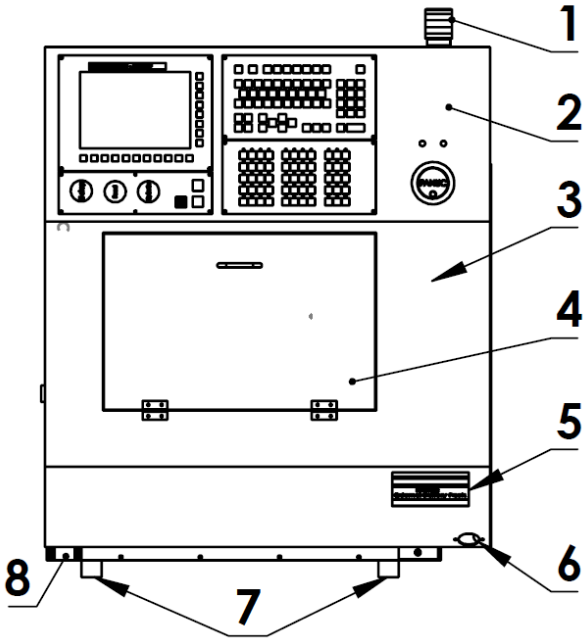

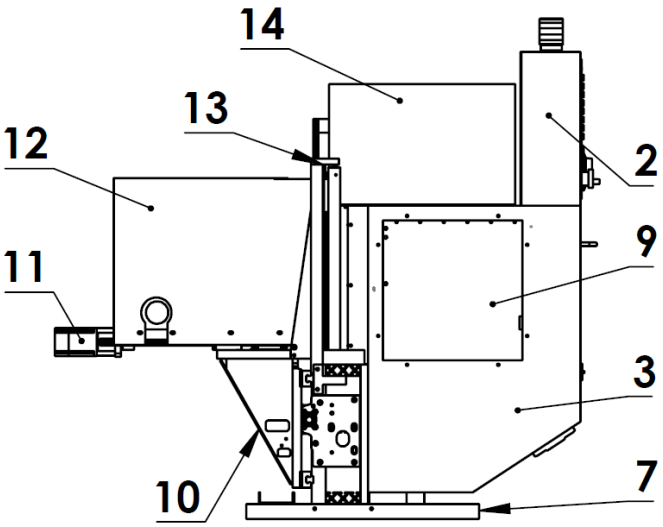

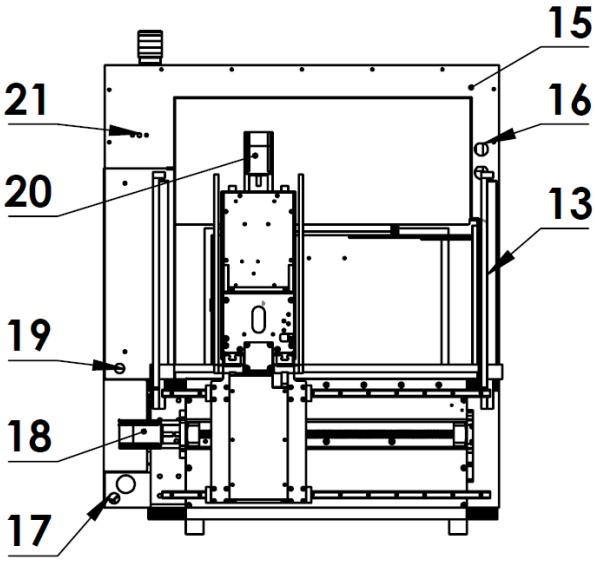

II. Dimensional Drawings

The following figure represents a front view and a side view of the machine with their respective measurements.

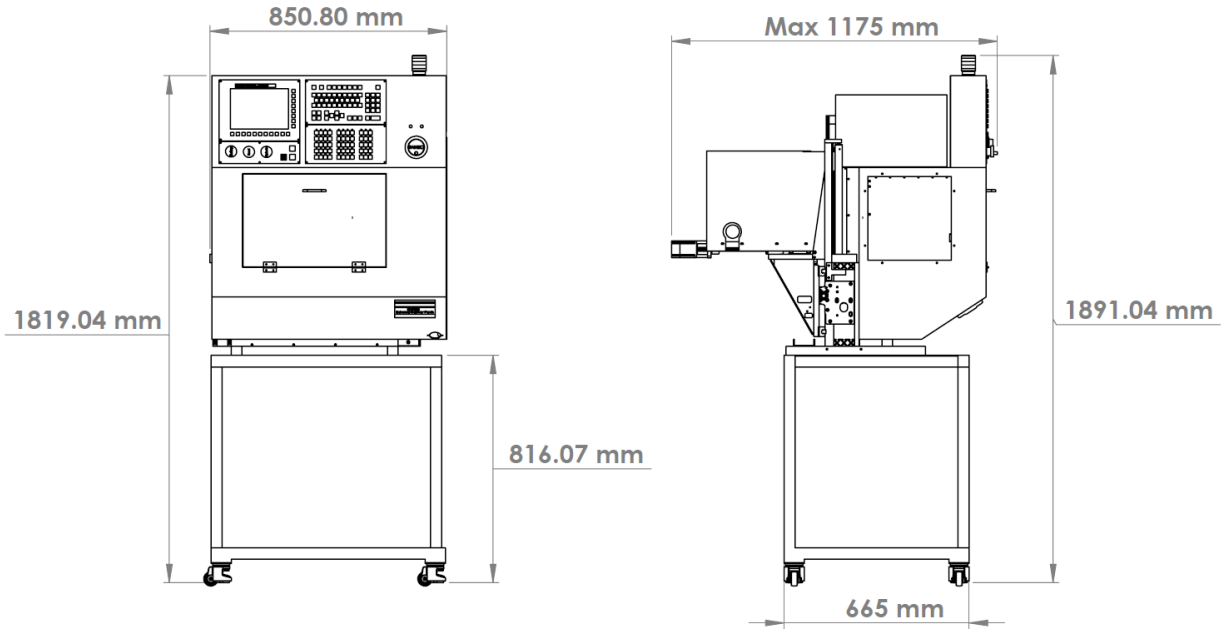

Fig. 3 LMV-F400 basic dimensions from front view (left) & side view (right)

III. Working Space Required

The following top view drawing of the machine depicts the necessary working space required for easy operation and maintenance of the machine.

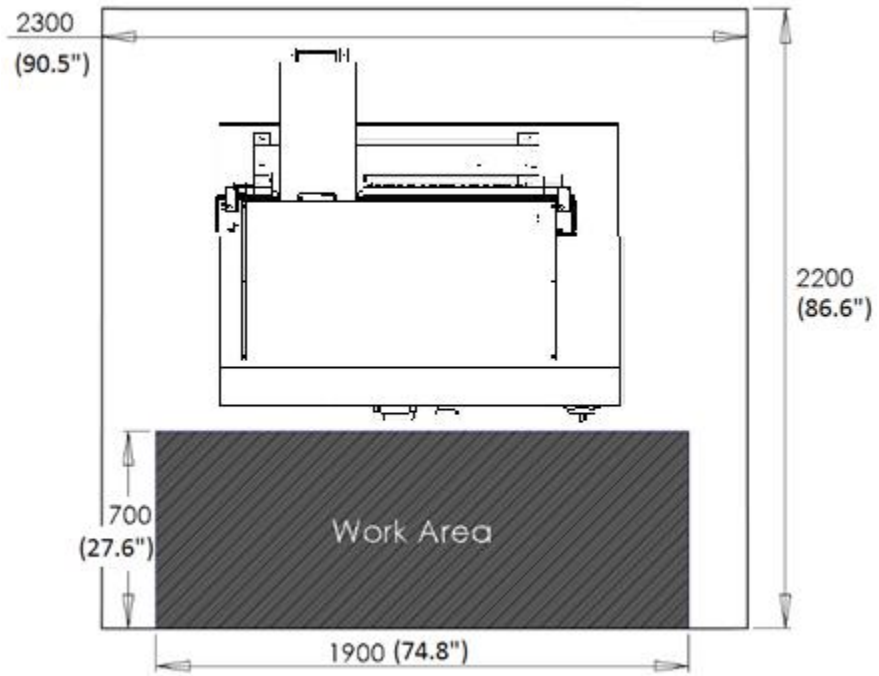

Fig. 4 Top view of working space, all dimensions in mm

IV. Caution Labels on the Machine

Caution labels provide the operator with safety related information that must be strictly observed. These labels are found in key areas of the machine, visible without the need to remove any covers

Table I: Safety label picture and instruction.

(1) 	**WARNING:** Rotating cutter. Keep hands clear. Lockout/tag-out before servicing.
(2) 	**WARNING:** Flying objects. Wear approved eye protection when operating this equipment.
(3) 	**WARNING:** Electrical Hazard. 220 VAC running through the system.
(4) 	Only 220 VAC are to be supplied through this cable.

V. Machine Specifications

Table II: Machine specifications and capacity.

Description	CNC Certification Cart
Table	
Table Work Area	427 x 250mm (16.8" x 9.8")
Tool Rack Width (11 Tools)	102mm (4")
Tool Rack Width (17 Tools)	132mm (5.2")
Table Load	81 kg (180 lbs)
Slots on Table (10 Slots)	8mm (5/16")
Travel	
X Axis	421mm (16.5")
Y Axis	217mm (8.5")
Z Axis	190mm (7.5")
4th Axis	0.001 - 360°
Distance from Table Surface to Spindle Nose	70mm - 260mm (2.75" - 10.2")
Resolution	0.001mm (0.00004")
Repeatability	0.005mm (0.0002")
Accuracy	0.01mm (0.0004")
Spindle (LS-20-C)	
Spindle Taper	S20T
Spindle Speed	100 rpm - 14,000 rpm
Drive Method	Direct Drive
Spindle Motor Power	2HP
Feed	
Rapid Feed (X, Y & Z)	10,200 mm/min (400 ipm)
Cutting Feed (X, Y & Z)	6,120 mm/min (240 ipm)
Rapid Feed (4th Axis)	19 rpm (7,000 deg/min)
Auto Tool Change (With LS-20-C spindle)	
Number of Tools	11 Standard (Up to 17)
Tool Change Method	Gravity Fed Fixed Pot
Tool Holder	S20T-ER16
Maximum Tool Diameter	10mm (3/8")
Tool Change Time (Chip to Chip Time)	12 seconds
Machine Weight	
Basic Setup	215 kg (475 lbs)
Utilities	
Air Consumption	87 L/min (3 cfm)
Power	220 VAC, 15A

VI. Standard Accessories

1) Coolant system (Pump and Tank)
2) Metal chip filter
3) Splash guard
4) 4th axis preparation
5) Machine Operating manual
6) FANUC 0i-F Control Operating Manuals

VII. Optional Accessories

1) 4th axis complete set (4” 3 jaw chuck)
2) Automatic tool length sensor
3) 17-station gravity fed type ATC for LS-20-C spindle
4) Steel Machine Stand with leveling casters
5) 2.5” Pneumatic vise
6) Robot integration for automatic loading and offloading
7) 24,000/40,000/60,000/80,000/100,000 rpm spindle speeds

VIII. Layout of Tool Racks

When the machine comes equipped with the LS-20-C spindle, the machine is capable of performing automatic tool changes. The LS-20-C comes standard with an 11 slot tool rack for up to 11 tool holders and it is upgradable to 17 slots. The layout of these tool racks are presented on Figure 5 and Figure 6 below.

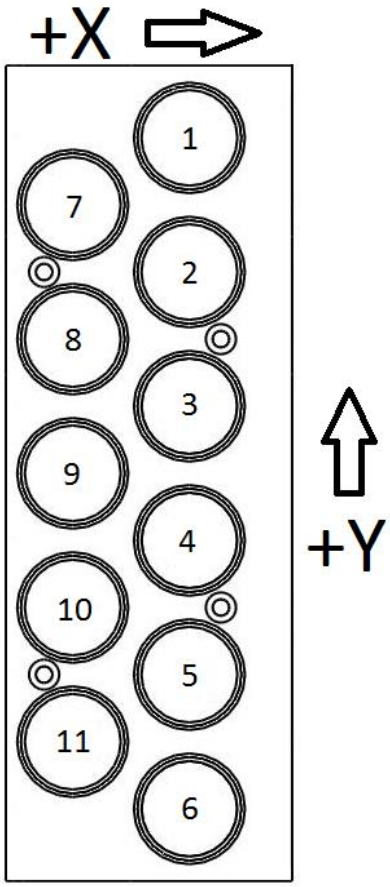

Fig. 5 Standard Tool Rack layout

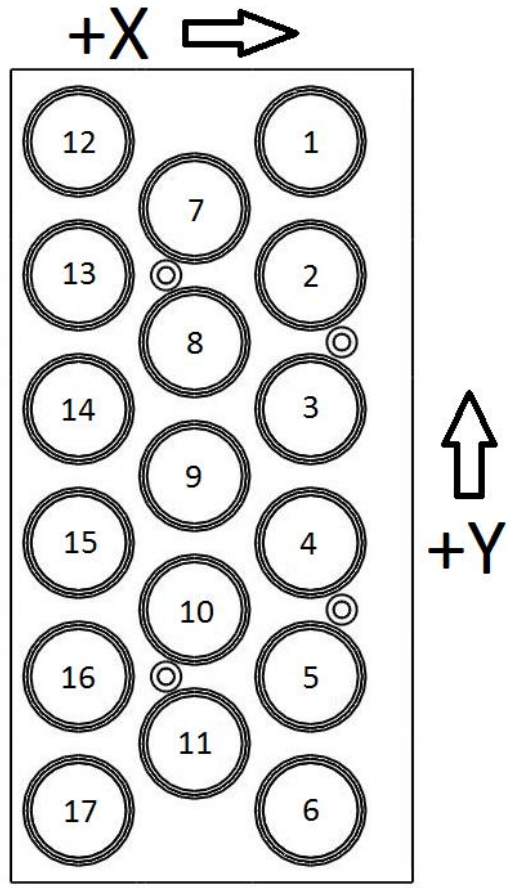

Fig. 6 Optional Tool Rack layout

IX. Power Specifications

Item	
Voltages	1-phase, 220 VAC
Frequency	50/60 Hz ± 1 Hz
Voltage Tolerance	± 10% or below
Power gross load capacity	2 HP (1.4 KVA)
Primary power cable	4 mm^2 or more
Grounding cable	4 mm^2 or more

Table 3: Power specifications

X. Optional Tool Shank and Pull Stud

The following figures represent the technical drawings of the S20T tool holder that is used on the LS-20-C spindle. All measurements are in mm.

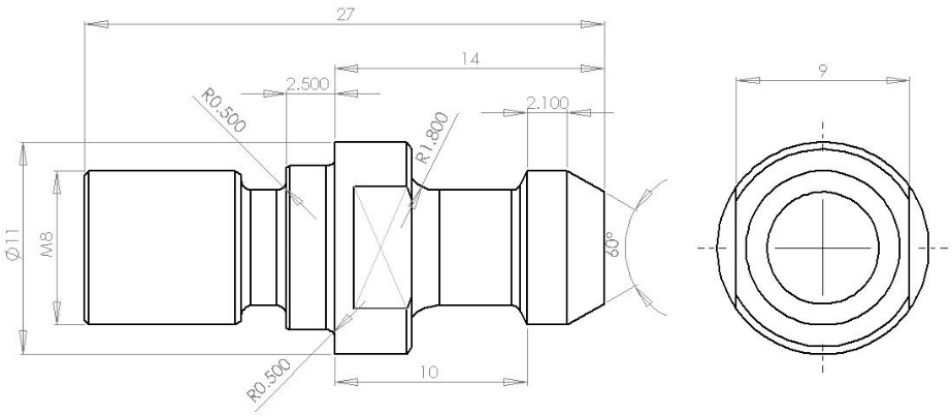

Fig. 7 S20T Pull Stud

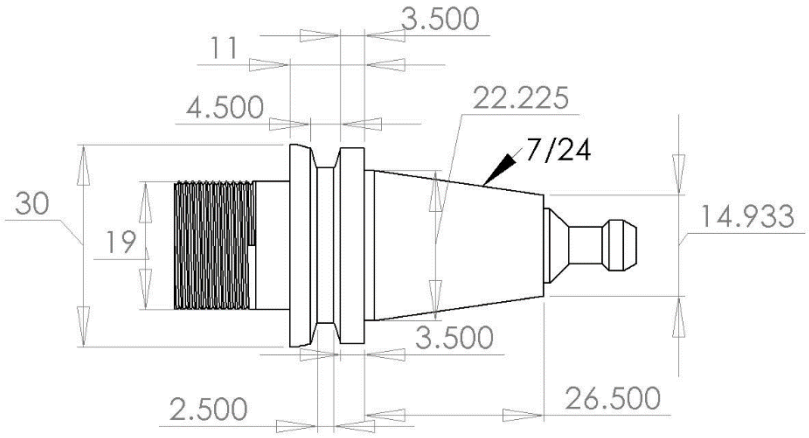

Fig. 8 S20T Tool Shank

XI. Axis movement

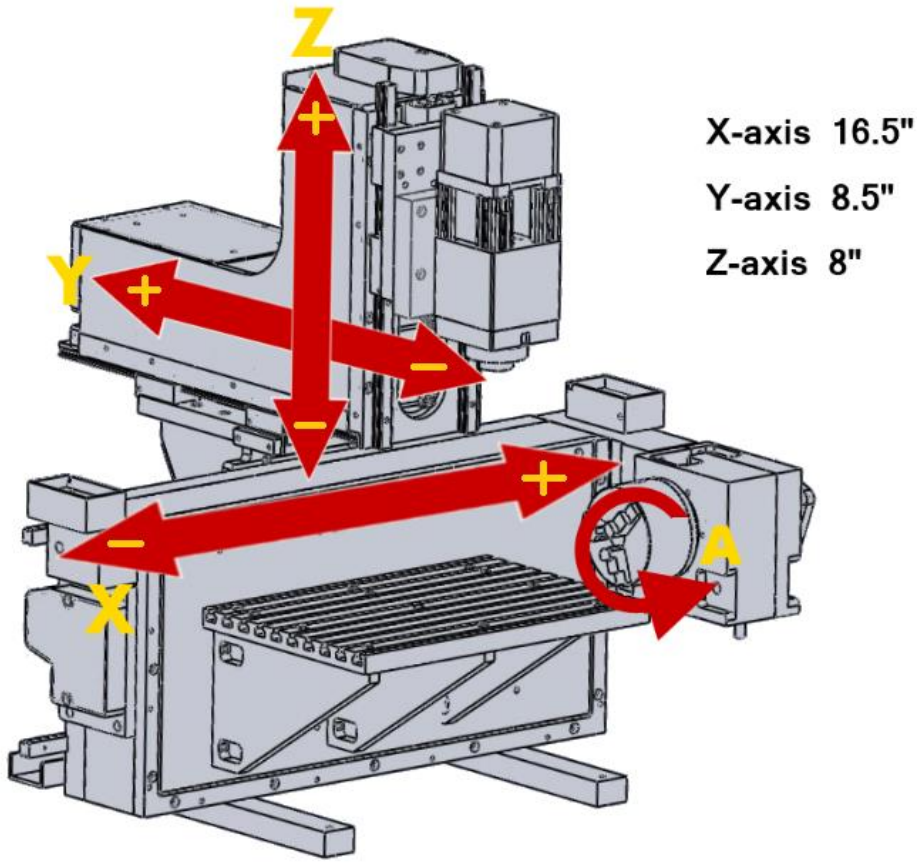

Fig. 7 Positive and negative axis movements for the machine

3. Machine Installation

I. General Preparation & Selecting Location

Do not power on the machine until the installation preparations are completed. Never open the lower electronics bay cabinet door with the power on, high voltage will be present in the electronics bay and there will be a risk of shock or injury.

It is recommended to place the machine in an air conditioned environment where the ambient temperature is kept between 0 to 45°C (32 to 113°F), and a relative humidity of 75% or below. The machine is not allowed to be exposed to sun light or rain.

A clearance of at least 0.5 m between the machine and any surrounding machinery or walls is required to ensure easy access for maintenance or cleaning purposes. Installing the machine next to a planning, milling, or punching machine may result in poor performance due to vibrations from the ground.

II. Foundation and Layout

The machine should be mounted on a desk or table strong enough to support 1000 lbs. The desk/table is required to have a solid base so the machine does not rock back and forth when it is in operation.

If the machine base is included with your machine, solid floors such as concrete are preferred when engaging the leveling casters. Make sure the foundation is leveled to avoid unnecessary stresses on the machine.

III. Installation Procedure

1) Remove the top cover of the wooden case first and then the plates on the four sides.
2) Use a forklift as depicted in Figure 8 to lift the machine and place it on top of the Machine Stand.

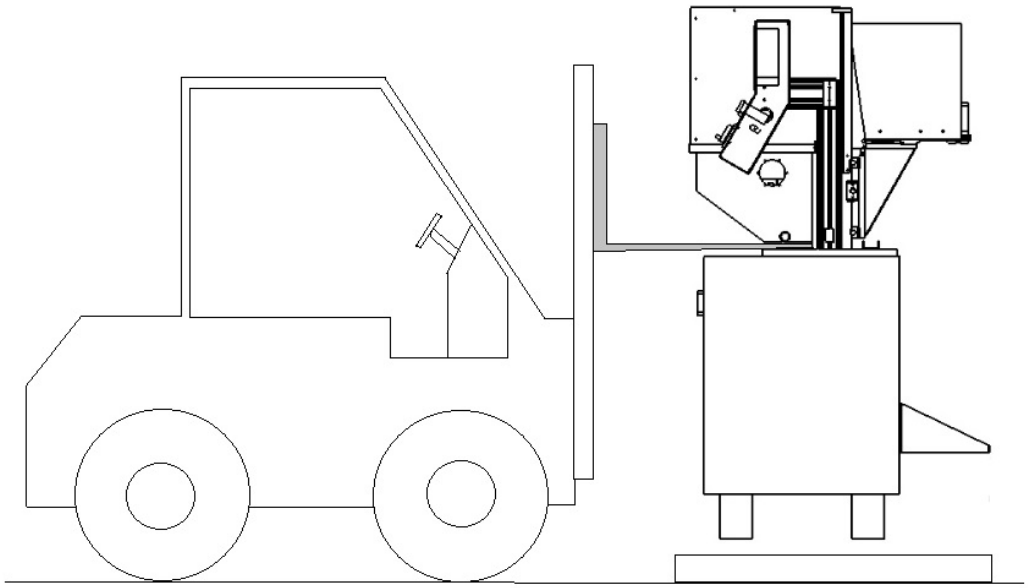

Fig. 8 Proper way of lifting the machine

3) Secure machine to stand using screws provided on holes located on the legs of the machine.
4) Roll machine to desired location.
5) Lower levelers located on the casters of the machine stand to make machine more stable.
6) Connect the coolant and compressed air hoses to the back of the machine.
7) Connect the power cord to a 220 VAC source.

IV. Checkups during the Test Run

Before starting the machine for a test run, check the following:

1) Check that there are no missing parts or accessories.
2) Make sure the linear guide way tracks are well lubricated.
3) All hoses should be firmly connected to their respective connections.
4) Check that the coolant tank installation on the cart is secure.

During the test run, turn the spindle at half of its maximum speed for about 20 minutes after the warm up procedure is completed. If there is any malfunction such as obvious abnormal noise coming from the spindle or an alarm message in the control screen, please contact the manufacturer for help.

V. Relocation of the Machine

This machine was designed to be modular for easy transportation by one individual without the need of a pallet jack or forklift if it is mounted on a machine stand with casters. If it is desired to relocate the machine to another room, the machine can be positioned such that it will fit through a door frame of at least 34" wide. The following procedure should be used for proper transportation of the machine from one room to the next.

1) If the machine is off, turn it on following the proper procedure.
2) Move the machine in the Z axis to its home position.
3) Move the machine in the X axis to its home position.
4) Move the machine in the Y axis to its most negative position until the over travel alarm goes off.
5) Press the E-stop button on the Operator's Panel.
6) Turn off the machine and disconnect the power cable.
7) Remove the compressed air hose connection in the back of the machine.
8) Release the levelers on the caster wheels located under the machine stand
9) Grab the machine stand by its sides and push or pull the machine.
10) Only backwards or forward movement of the machine is allowed. Sideways movement is will not allow the machine to fit through a doorway.
11) Align the machine with the door frame and carefully push/pull the machine through it.
12) When the machine reaches its final destination, raise the machine using the levelers on the caster wheels.
13) Connect the compressed air hose to the back of the machine.
14) Connect the power cord to a 220 VAC source.
15) The machine is now ready to be powered on again.

4. Operation

I. Overview of the Operator Interface

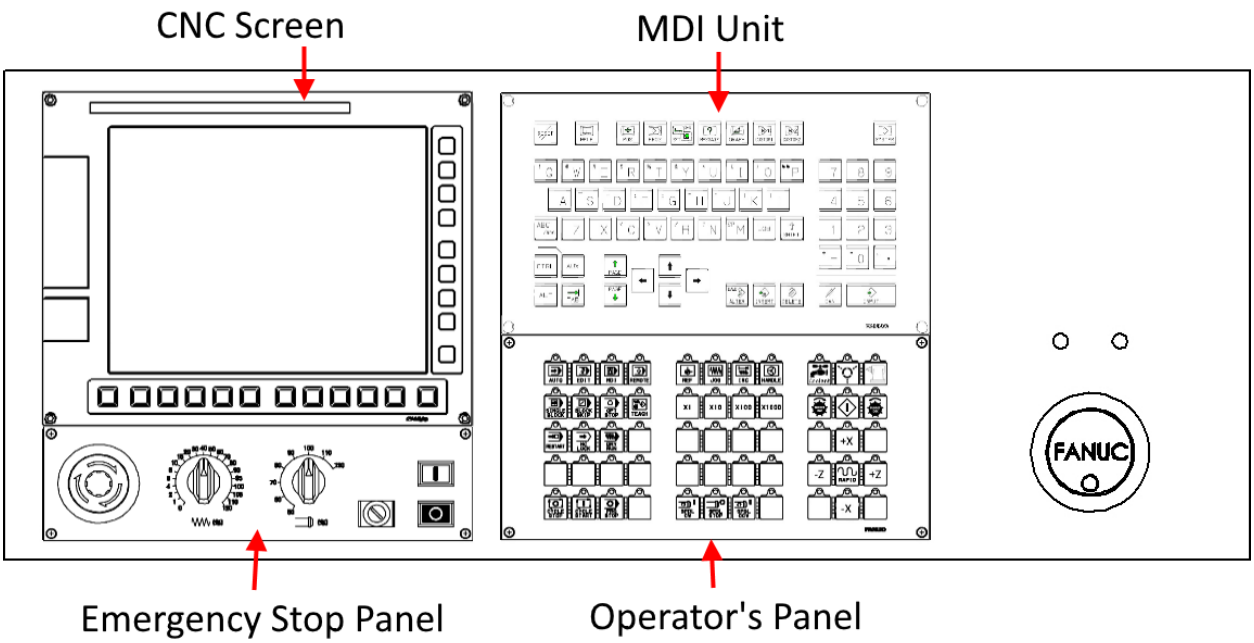

The operator interface includes four main components:

1) CNC Screen
2) MDI Panel
3) Machine Operator Panel
4) Emergency Stop Panel

For information on the CNC screen and MDI panel, see the FANUC Series 0i-F OPERATOR'S MANUALS. For information on the functions of the Machine Operator Panel, see below.

II. Overview of Machine Operator Panel Functions

Table IV: Control module buttons and descriptions.

Button	Function
	**Auto Mode Selection Signal** Sets automatic operation mode. Used when running codes automatically from the CNC memory.
	**Edit Mode Selection Signal** Sets program edit operation mode. Used to add/delete codes into the CNC memory. Also used to make changes manually to the code inside the CNC memory.
	**MDI Mode Selection** Sets the manual data input (MDI) mode. Used to manually input data into the CNC
	**DNC Operation Mode Selection** Sets DNC operation mode. Used to run codes from the Flash Memory port.
	**Reference Position Mode Selection** Sets reference position return mode. Used to move the machine towards its home position only.
	**Jog Feed Mode Selection** Sets jog feed mode. Used to jog the machine using the axis buttons located on the Operator's Panel.

	**Step Feed Mode Selection** Sets step feed mode. Used to move the machine in steps when pressing the axis buttons in the Operator's Panel
	**INC Amount Buttons** In "Step Feed" mode, choose between 0.1mm, 0.01mm, and 0.001mm intervals in the selected axis travel. In "Handle" mode, choose between 0.1mm, 0.01mm, and 0.001mm intervals in the selected axis travel.
	**Manual Handle Feed Mode Selection** Sets manual handle feed mode. Used to move the machine using the MPG (manual pulse generator) located to the right side of the Operator's Panel
	**Single Block Button** Executes program line by line, stopping at every line. This key is used to check a program.
	**Block Skip Button** Pressing this button during automatic operation causes the block under execution to stop, skipping to the end of the block.
	**Optional Stop Button** Stops automatic operation after execution of the block of a program where M01 is specified in the program.
	**Teach Button** Manually create a program by teaching points to the machine. Must be in Handle Mode in order to use this function

	**Program Restart Button** A program may be restarted at a block by specifying the sequence number of the block.
	**Machine Lock Button** Locks the machine axis to have the CNC run through the program without actually moving the machine.
	**Dry Run Button** Sets the axis feed to the jog feed rate instead of a programmed feed rate when automatic operation is performed. This function is used to check the movement of the tool or speed up tool movement while there is no stock material.
	**Cycle Stop Button** Pauses automatic operation.
	**Cycle Start Button** Starts automatic operation.
	**Program Stop Button** Turns on the LED on the button when automatic operation is stopped by M00 specified in the program.
	**Spindle CW Button** In manual mode, press this button to turn on the spindle in a clockwise direction. Be sure to input an S value and an M3/M4 value, otherwise spindle will not rotate. Change to MDI to input or alter S value.

	**Spindle Stop Button** In manual mode, press this button to stop the spindle rotation.
	**Spindle CCW Button** In manual mode, press this button to stop the spindle rotation.
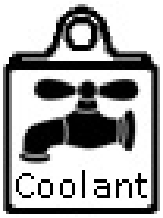	**Coolant Toggle Button** Press this button to toggle the coolant ON and OFF
	**Manual Tool Release Button** Press and hold this button for three seconds to activate the tool release mechanism
	**Function 1 Button** User defined function. Requires ladder change
	**Function 2 Button** User defined function. Requires ladder change
	**Function 3 Button** User defined function. Requires ladder change

	**Function 4 Button** User defined function. Requires ladder change
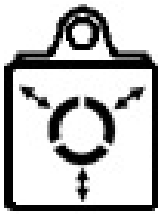	**Vise Toggle Button** (Option) Press and hold this button for 2 seconds to toggle the pneumatic vise open or close **Note:** This may be optional on your machine
	**Door Toggle Button** (Option) Press and hold this button for 2 seconds to toggle the side door open or close **Note:** This may be optional on your machine
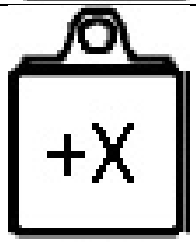	**X-axis Positive Travel Button** In jog mode, press this button to move the spindle in the positive X direction. In handle mode, press this button to select X axis movement when using the MPG.
	**X-axis Negative Travel Button** In jog mode, press this button to move the spindle in the negative X direction. In handle mode, press this button to select X axis movement when using the MPG.
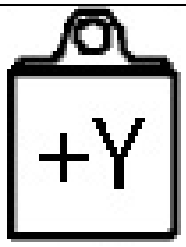	**Y-axis Positive Travel Button** In jog mode, press this button to move the spindle in the positive Y direction. In handle mode, press this button to select Y axis movement when using the MPG.
	**Y-axis Positive Travel Button** In jog mode, press this button to move the spindle in the negative Y direction. In handle mode, press this button to select Y axis movement when using the MPG.

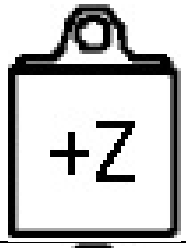	**Z-axis Positive Travel Button** In jog mode, press this button to move the spindle in the positive Z direction. In handle mode, press this button to select Z axis movement when using the MPG.
	**Z-axis Negative Travel Button** In jog mode, press this button to move the spindle in the negative Z direction. In handle mode, press this button to select X axis movement when using the MPG.
	**A-axis Positive Travel Button** In jog mode, press this button to move the spindle in the positive A direction. In handle mode, press this button to select A axis movement when using the MPG.
	**A-axis Negative Travel Button** In jog mode, press this button to move the spindle in the negative Z direction. In handle mode, press this button to select X axis movement when using the MPG.
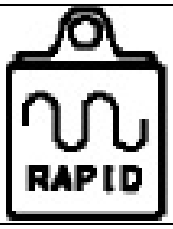	**Rapid Button** Press an axis button and this button simultaneously while jog mode is activated to move faster in said direction.
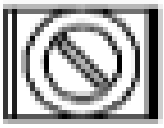	**Edit Key Lock** Lock or unlock access to edit programs in the CNC.

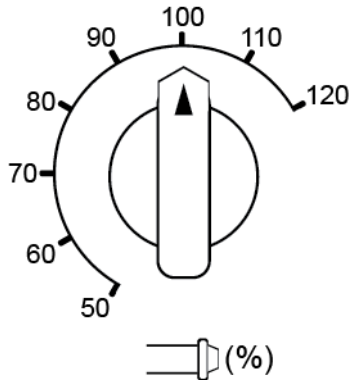	**Spindle Speed Override** Manually adjust the spindle speed when rotating. The changes are measured in the percentages of the initial speed setting.
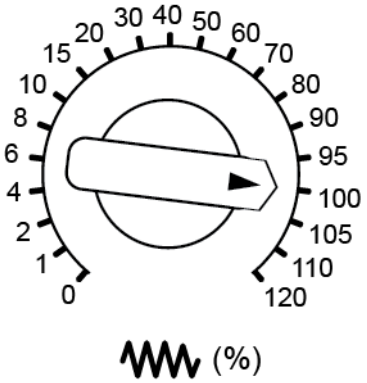	**Feed Rate Override** Manually adjust the feed rate of the machine when moving either manually or running a program. The changes are measured in the percentages of the initial speed setting.
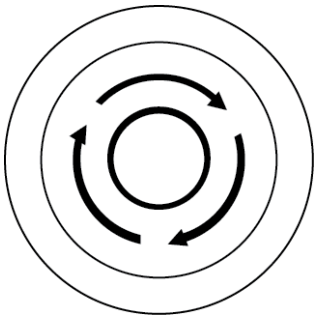	**Emergency Stop Button** Cuts the power to the servo motors and spindle when activated. Press during an emergency or before powering off the machine.
	**Handle or Manual Pulse Generator (MPG)** Moves an axis in the Increment mode and Axis mode selected when in Handle Mode

III. G-codes and M-codes

The following lists include the available G-codes and M-Codes usable with the LMV-F400

G codes	
G00	Rapid positioning
G01	Linear interpolation
G02	Clockwise circular/helical interpolation
G03	Counterclockwise circular/helical interpolation
G04	Dwell
G09	Exact Stop
G10	Coordinate system origin setting
G11	Programmable data input cancel
G15/G16	Polar Coordinate moves in G00 and G01
G17	XY Plane select
G18	XZ Plane select
G19	YZ Plane select
G20/G21	Inch/millimeter unit
G22	Stored Stroke Function On
G23	Stored Stroke Function Off
G27	Reference Position Return Check
G28	Return to reference position
G29	Movement from reference position
G30	2nd, 3rd, 4th reference position return
G40	Cancel cutter radius compensation
G41/G42	Start cutter radius compensation left/right
G43	Apply tool length offset (plus)
G45	Tool offset: increase
G46	Tool offset: decrease
G47	Tool offset: double increase
G48	Tool offset: double decrease
G49	Cancel tool length offset
G50	Reset all scale factors to 1.0
G50.1	Programmable mirror image cancel
G51	Set axis data input scale factors
G51.1	Programmable mirror image
G52	Temporary coordinate system offsets
G53	Move in absolute machine coordinate system
G54	Use fixture offset 1
G56-59	Use fixture offset 2, 3, 4, 5, 6
G60	Single direction positioning
G61	Exact stop
G62	Automatic corner override
G63	Tapping mode

G64	Cutting mode
G65	Macro call
G68	Coordinate system rotation
G69	Coordinate system rotation off
G73	Canned cycle – peck drilling
G74	Left handed tapping cycle
G76	Fine boring cycle
G80	Cancel motion mode (including canned cycles)
G81	Canned cycle – drilling
G82	Canned cycle – drilling with dwell
G83	Canned cycle – peck drilling
G84	Canned cycle - rigid tapping cycle
G85	Canned cycle – boring, no dwell, feed out
G86	Canned cycle – boring, spindle stop, rapid out
G88	Canned cycle – boring, spindle stop, manual out
G89	Canned cycle – boring, dwell, feed out
G90	Absolute distance mode
G91	Incremental distance mode
G92	Setting for work coordinate system or clamp at maximum spindle speed
G92.x	Coordinate system preset
G94	Feed per minute mode
G95	Feed per rev mode
G98	Initial level return after canned cycles
G99	R-point level return after canned cycles

M Codes	
M00	Compulsory Stop
M01	Optional Stop
M02	End of program
M03	Spindle on (clockwise rotation)
M04	Spindle on (counter-clockwise rotation)
M05	Spindle off
M06	Automatic tool change
M08	Coolant on (flood)
M09	Coolant off
M29	Rigid tap mode On
M33	Touch Probe On (Optional)
M34	Touch Probe Off (optional)
M35	Drawbar release
M36	Drawbar engage
M37	ATC door open
M38	ATC door close
M41	Spindle Low Gear (Optional)
M42	Spindle High Gear (Optional)
M52	Automatic Door Open (Optional)
M53	Automatic Door Close (Optional)
M68	Automatic Vice Open (Optional)
M69	Automatic Vise Close (Optional)
M100	Robot Load (Optional)
M101	Robot Reload (Optional)
M102	Robot Unload (Optional)
M103	Machine Clear of Robot On (Optional)
M104	Machine Clear of Robot Off (Optional)
M105	Macro Call to Program O9009 (Optional)

IV. Keep Relays

The following table shows the keep relays used on the machine.

Keep Relay Address	Function
K0.1	Door sensor signal override
K0.2	Low air pressure signal override
K0.3	Spindle driver error signal override
K0.5	Side door sensor signal override
K1.0	All over travels override
K1.1	Use ROV 1%
K1.2	Rewind program on reset
K2.0	4th axis exist
K2.1	5th axis exist
K2.2	6th axis exist
K3.0	Side door logic enable
K3.1	Auto vice logic enable
K3.2	Rigid tap retract logic enable
K3.3	Tower light logic enable
K3.4	Robot logic enable
K5.0	Robot clear signal override

V. Machine Start Up and Shut Down Procedure

In order to turn on the machine safely, the following instructions must be followed. You will run the risk of damaging the machine/internal components if this procedure is not followed.

1) Press the E-stop button. The E-stop button is the bright red button located on the Operators Panel.
2) Connect the power cable into a 110 VAC outlet.
3) Switch the Main Power switch to the ON position.

4) Wait for the CNC to boot up and then release the E-stop button when prompted with the EMERGENCY alarm.

The machine is now ready to be used. It is important to always perform a warm up of the machine before daily use.

When the machine is ready to be turned off, please follow the following procedure.

1) Send the machine to its home position on the Z axis by selecting the REF button on the Operator's Panel and pressing the +Z button until the machine reaches its home position.
2) Press the E-stop button to activate it.
3) Switch the Main Power switch to the OFF position.

VI. Loading files into the CNC using a USB drive

1) Insert the USB drive containing the program to be loaded into the CNC's USB port located to the lower left side of the CNC screen.
2) Make sure the I/O channel is set to "17" by pressing the 

key on the MDI panel followed by the **[SETTINGS]** soft key and checking that the I/O setting is 17.
3) Press the 

button on the operator panel followed by the 

button.
4) Press the **[DIR]** soft key and navigate to the desired folder, press the **[FORE CHANGE]** soft key.
5) Press the **[OPRT]** soft key and search for the **[DEVICE]** soft key using the right arrow soft key and press it.
6) Press the **[USB MEM]** soft key.
7) Press the **[FILE INPUT]** soft key.
8) Search for the program to be loaded into the CNC and highlight it using the up and down arrow keys on the MDI panel.
9) Press the right arrow soft key to search for the **[F GET]** soft key and press it and notice that the name of the program is loaded into the buffer.
10) Press the right arrow soft key to search for the **[F SET]** soft key and press it.
11) Notice that the name is loaded into the "F =" buffer.
12) Write the program number to be assigned to the program and press the **[P SET]** soft key and notice the number is loaded into the "P =" buffer.
13) Press the **[EXEC]** soft key and notice the word "INPUT" appears on the lower right corner of the screen as the file is uploaded to the CNC.
14) Press the 

button on the MDI panel to display the program and check that the correct program is loaded.

VII. Automatic Operation

This machine can run G-codes automatically if they have been pre-loaded into the CNC, if the codes are manually written into the CNC or if an external compact flash card containing the G-code is loaded into the CNC (DNC Operation).

Follow the procedures bellow to properly activate the machine for automatic operation.

For codes previously loaded into the CNC:

1) Press the 

button on the operator panel.
2) Type "Oxxxx" where the "xxxx" represent the program number given to the codes when it was first loaded into the CNC.
3) Press the **[O SRH]** soft key.
4) Verify that the correct program is loaded on the "**Program (Check)**" window.
5) Check that all required tools are loaded in the machine with the correct tool positions and height offsets.
6) Set the reference zero position for the workpiece.
7) Press the 

button on the operator panel to begin automatic operation.

For codes to be written manually into the CNC:

1) Press the 

button on the MDI panel
2) Press the 

button on the operator panel
3) The following screen appears

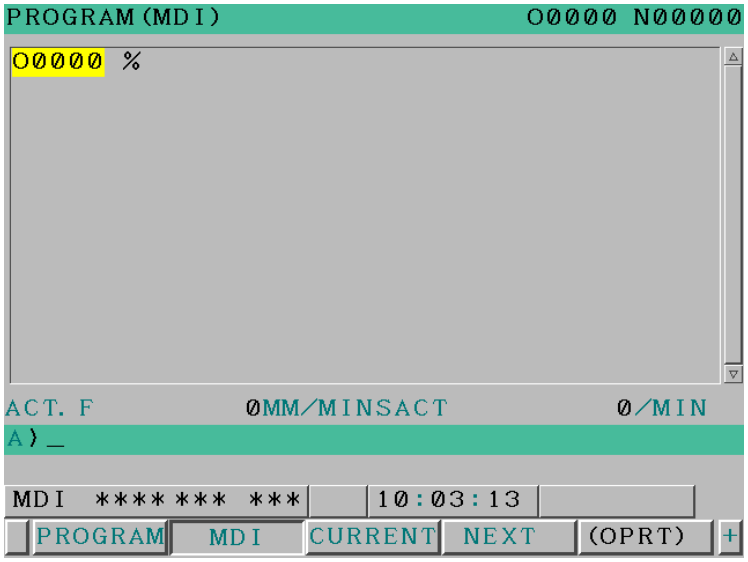

4) Manually input the commands using the MDI panel

5) When finished, press the 

button on the operator panel to begin automatic operation

For codes to be run through the Compact Flash Card (DNC Operation):

1) Insert the Compact Flash card into the PCMCIA card reader slot located on the left side of the CNC's screen

2) Make sure the I/O channel is set to "4" by pressing the 

key on the MDI panel followed by the **[SETTINGS]** soft key and checking that the I/O setting is 4

3) Press the 

button on the operator panel

4) Press the 

key on the MDI panel
5) Search for the **[DIR]** soft key using the left and right soft keys and press it
6) Press the **[OPRT]** soft key
7) Search for the **[DEVICE]** soft key using the right arrow soft key and press it
8) Press the **[M-CARD]** soft key
9) The following screen appears

```
MEMORY CARD                                   N00000
DNC FILE  O0123
                                   REG NUM        60
DEVICE : M_CARD
 NO.     FILE NAME   SIZE(KBYTE)   UPDATE
D0017 O0123                    1  2008/01/23
 0018 O0567                    1  2008/02/06
 0019 O1000                    1  2008/01/30
 0020 O1001                    1  2008/01/31
 0021 O1002                    1  2008/01/31
 0022 O1003                    1  2008/01/31
 0023 O1234                    1  2008/02/19
 0024 O2222                    1  2008/01/28
A)_

RMT  ******** ***      10:07:34
(DEVICE  REFRESH DNC SET DNC CLR                +
```

10) Look through the files to find the program to be used and notice the file number to the left
11) Type the number using the MDI panel
12) Search for the **[DNC SET]** soft key using the right soft key and press it
13) You will notice that a "D" appears next to the file number
14) Press the 

key on the MDI panel to display the program that is about to run
15) Press the 

button on the operator panel to begin automatic operation

VIII. Outputting programs from the CNC into a USB drive

After a program has been edited on the CNC it can be exported into a USB drive. Please follow the directions bellow to export the program safely into the USB drive

1) Insert a USB drive into the CNC's USB port located to the lower left side of the CNC screen
2) Make sure the I/O channel is set to "17" by pressing the 

key on the MDI panel followed by the **[SETTINGS]** soft key and checking that the I/O setting is 17
3) Press the 

button on the operator panel
4) Press the 

function key on the MDI panel
5) Press the **[DIR]** soft key followed by the **[OPRT]** soft key
6) Search for the **[F OUTPUT]** soft key using the right arrow soft key and press it
7) Type the program number to output and press the soft key [O SET]. To specify an output file name
8) Type the output file name and press the soft key **[F-NAME]**
9) Press the **[EXEC]** soft key and notice the word "OUTPUT" flash on the lower right hand side of the screen
10) Once the word "OUTPUT" stops flashing, the program has been saved into the USB drive

IX. Deleting programs from the CNC memory

After a program has been used and is not needed any longer and there is a need to create space in the CNC memory, programs can be deleted.

Please follow the procedure bellow to delete programs from the CNC memory safely.

1) Press the 

button on the operator panel
2) Press the 

function key on the MDI panel
3) Write “Oxxxx” where “O” is the letter O and “xxxx” represents the program number to be deleted
4) Press the 

function key on the MDI panel

X. Spindle Operation

Spindle operation is very simple on this machine. Simple commands must be loaded into the control in order to begin spindle operation.

CAUTION!

The spindle should always be warmed up before daily use or else you run the risk of lowering the spindle bearing's life. The process should begin by rotating the spindle at 1500 rpm for 10 minutes and then speeding up to 3,000 for another 5-10 minutes.

Please follow the procedure when attempting to operate the spindle manually.

1) Press the 

button on the operator's panel.

2) Press the 

key in the MDI panel to navigate to the manual data input page on the CNC.

3) Write the following "**S1000 M3**" using the MDI Panel.

4) Press the 

key to finish the line command that you are about to load into the control. It should read " **S1000 M3 ;** "

5) Click the 

key and notice the line command being loaded into the control.

6) Press the 

button on the Operator's Panel and notice the spindle begins rotating at 1000 rpm. Make sure the door is closed so the safety sensor makes contact or else the machine will not run the command.

The letter "S" tells the control that you are about to give a "Spindle" command which is followed by a number (in our case we chose 1000) which denotes the desired spindle speed or rpm. The code "M3" tells the machine to turn on the spindle in a clockwise direction.

The spindle can be manually turned ON/OFF using the **[SPDL CW]** and **[SPDL STOP]** buttons on the Operator's Panel; however an initial spindle speed and direction must be loaded into the control beforehand.

The spindle speed can be adjusted manually while the spindle is rotating by using the Spindle Override knob located on the Operator's Panel. The speed can be adjusted from 50% to 120 % of the loaded spindle speed in increments of 10%.

The spindle uses two methods for cooling which are pressurized air and liquid cooling.

The pressurized air enters through the right side of the spindle headstock and exits through small openings all around the bottom of the headstock. The pressurized air should be no less than 90 PSI and no more than 120 PSI. There is an adjustable flow valve that limits the amount of air flowing through the spindle. The valve is located next to the headstock on the right side. The compressed air can cool the spindle at speeds of 10,000 rpm or less. The flow of air will not be sufficient to cool the spindle at higher speeds. The valve should be ¼ of the way open when running the spindle at low speeds and completely open when running the spindle at speeds near 10,000 rpm when liquid cooling is not available.

The liquid cooling is done by using the machine's own coolant. The coolant is routed through the spindle headstock before exiting through the exit nozzle. It is recommended to use the coolant as a cooling method when running the spindle at speeds higher than 10,000 rpm. The compressed air valve should be open ¼ of the way if liquid cooling is available. Please read section 4.8 **"Coolant System Operation"** for a detailed description on the coolant system.

The following graph shows the torque vs speed curve for the spindle motor. The intermittent curve values last for only up to 2 full seconds.

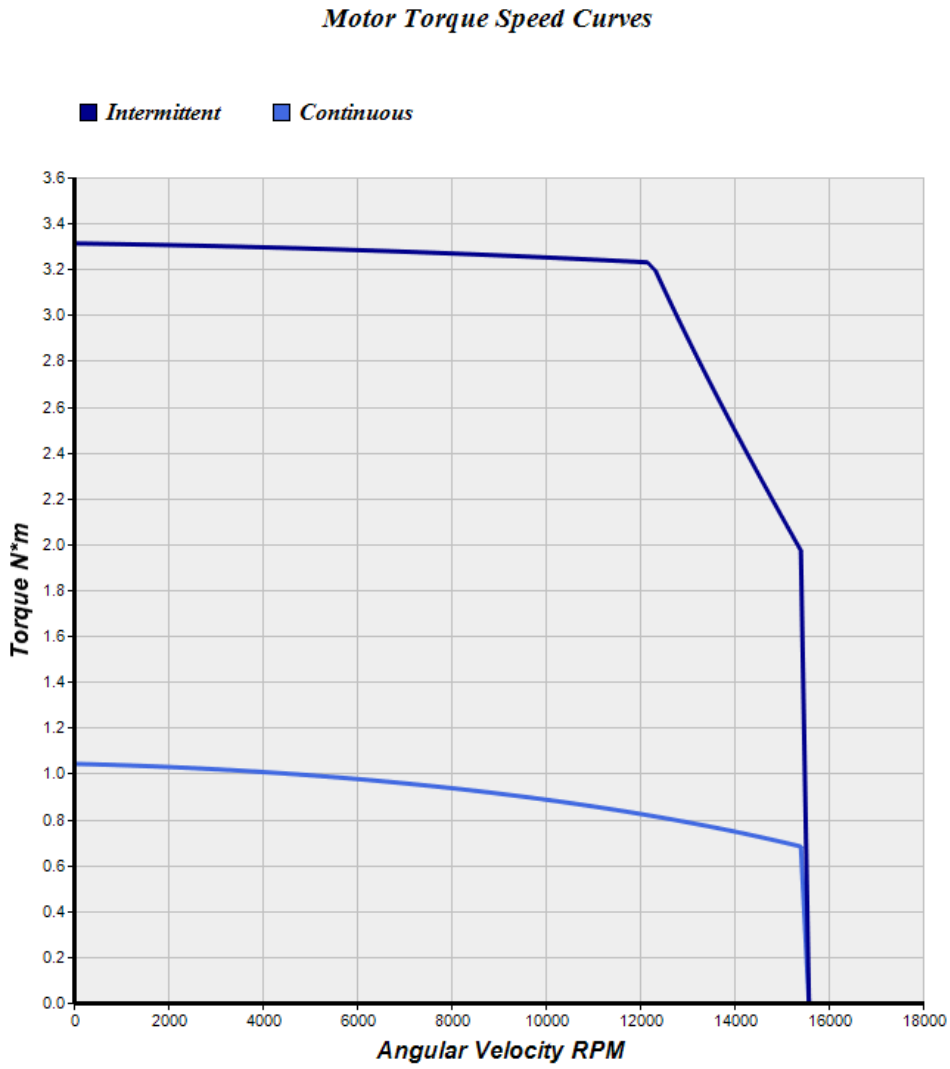
Motor Torque Speed Curves
Intermittent
Continuous
Torque N*m
3.6
3.4
3.2
3.0
2.8
2.6
2.4
2.2
2.0
1.8
1.6
1.4
1.2
1.0
0.8
0.6
0.4
0.2
0.0
0
2000
4000
6000
8000
10000
12000
14000
16000
18000
Angular Velocity RPM

XI. Setting the Work-piece Coordinate System

Any time a new work-piece is placed in the machine, its coordinate system offset values (or the work-piece's "zero" position) must be measured so that the CNC can locate its exact position. The following procedure is a brief guide to ensure proper work piece set up when using an edge finder.

1) Secure work-piece in the work area to ensure it will not move during the measurement and machining process.
2) Change tools so that the reference tool (edge finder) is mounted in the spindle. Please review section 4.7 "**Performing a Tool Change**" for a more detailed description on how to do this.
3) Inspect the work-piece edges to make sure there are no burrs or other imperfections that may cause a false edge reading. If there are, use a file or manual deburring tool to smooth out the edges.
4) Start the spindle at 1000 rpm.
5) Move the machine so that the edge finder is about 25 mm (1") from the work-piece.
6) Choose an edge to measure (X or Y axis). Normally the left edge (X-axis) of the work piece is measured first.
7) Move the edge finder in the Z axis until the measurement end is just below the top surface of the work-piece.
8) In jog or handle mode, slowly move the edge finder closer to the chosen edge.
9) Keep moving the edge finder towards the edge until its upper and lower parts align and stabilize. The operator should look at the edge finder from a direction perpendicular to the edge being measured.
10) Move the tool one increment (0.1 mm or 0.01") at a time towards the work-piece until the edge finder's measurement end kicks, then retract the edge finder one increment before it kicked.
11) Press the 

key and then the **[WORK]** soft key on the control panel to display the **Work Offsets** page. Navigate to the frame of reference used in the program for this work-piece. Frames of reference vary from **G54** to **G59**. For the purposes of this manual, do not use **G59** as a frame of reference for the work piece coordinate system.
12) Each axis has a numeric value, if doing the X axis first using the left edge, highlight the X axis and write "**X-#**" followed by the **[MEASURE]** soft key. The # represents the radius of the edge finder.
13) Move the edge finder away from the work-piece and position it along the next edge to be measured.

14) Repeat steps 7 through 11.
15) If doing the Y axis next, highlight the Y axis and write "**Y#**" followed by the **[MEASURE]** soft key. This will add the radius of the edge finder if measuring from the positive side of the work piece. If the measurement is to be done on the negative side, then a "**Y- #**" must be used.
16) Move the edge finder away from the work-piece and press the spindle stop button.
17) Position the edge finder right on top of the work-piece and lower it using the smallest Z axis interval possible.
18) Place a piece of paper in between the work-piece and the edge finder. While lowering the edge finder in small intervals, move the piece of paper until the tool clamps it down against the top surface of the work-piece.
19) In the Work Offset page, navigate to the reference frame being used and highlight the Z value. Write "**Z#**" and then the **[MEASURE]** soft key. The # represents the thickness of the piece of paper being used. On average, a piece of paper is roughly 0.1mm (0.004").
20) Return the spindle to its home position.
21) If multiple copies of the same work-piece are to be machined, mark the position of the measured work-piece so as to place the next part in the same position.

For more detailed information on measuring the work-piece coordinate system offset values, please review the **Easy CNC milling machine job setup** worksheet included with your device.

XII. Setting Tool Length Offsets

Before a new tool can be used, its tool length offset must be measured so the machine knows how long the tool is. Please follow this procedure when attempting to measure tool length offset:

1) Place the tool offset gage on a clean flat surface (e.g., on top of the vise).
2) Place the reference tool into the spindle (the edge finder).
3) Select MDI mode and input "**G59**" in the program window followed by the EOB E (;) and INSERT function keys in the control panel. The command line should read "**G59 ;** " press the cycle start button in the operator's panel to run the command.
4) Using the handle or jog mode, move the reference tool right over the tool offset gage and lower it using the smallest Z axis interval possible until the gage lights up, then move back one step.
5) Press the OFS SET key on the control panel, then press the **[WORK]** soft key to display the Work Offsets page. Navigate through the screen using the arrows until you reach the Z value for G59 and then input "**Z0**" with the control panel. Press the **[MEASURE]** soft key to set the reference zero value for the Z axis. The offset for the reference tool should only be measured once.
6) Retract the Z axis and place the new tool in the spindle head.
7) Repeat step 4.
8) Press the OFS SET key followed by the **[OFFSET]** soft key to display the tool offsets page.
9) Using the arrow buttons on the control panel, navigate through the screen and highlight the **GEOM (H)** position for the corresponding tool number. Write "**Z**" and press the **[INP.C]** soft key to store the difference in length between the reference tool and the tool being measured.
10) Repeat steps 6 through 9 for any additional tools.

For detailed instructions on measuring the tool length offset values, please review the **Easy CNC milling machine job setup** worksheet included with your device.

XIII. Automatic Tool Change Operations

The tool change system works by releasing the tool holder from the spindle and allowing gravity to pull the tool holder down into its pot in the tool rack.

It is very important to maintain the spindle taper and tool holder taper clean of any chips/dirt. They can get inside the tool change mechanism and cause the tool holder to get stuck and not release during a tool change operation.

Chips and dirt can also cause the tool holder taper to not align itself with the spindle taper thus creating a run out error that will decrease the precision of the spindle.

Since the tool rack sits in the work area and chips/dirt can fall on the tool holders while machining is in progress, it is recommended to leave the coolant on while performing a tool change.

In this machine you can change tools manually and automatically. The procedures below must be followed in order to properly perform a tool change without damaging any components of the machine.

CAUTION!

In order to perform a tool change, there must be a minimum of 90 PSI of compressed air attached to the machine. There is a quick disconnect male coupling in the back of the machine where an air hose can be attached using a quick disconnect female coupling.

1) Select 

mode, then on the program window, input "**M6**" which is the tool change command code, followed by "**T**" and then the corresponding tool number.

2) Once the line of command is ready, press the 

key followed by 

key.

3) Make sure to clean the spindle taper and tool holder taper of the new tool to rid it of chips/dirt (Failure to do so may result in a crash due to the tool holder becoming stuck).

4) To initiate the tool change, press the 

button.

To change tools manually, set the machine to either handle or jog mode and do the following:

1) Turn off spindle if it is rotating.
2) Hold the tool firmly to prevent it from falling.
3) Press and hold the 

button for three seconds to activate the tool change mechanism.
4) Make sure to clean the spindle taper and tool holder taper of the new tool to rid it of chips/dirt.
5) Press and hold the 

button and wait for the mechanism to activate, then position the desired tool inside the spindle taper and release the button. This will hold the tool in place.
6) Click the 

button, navigate to the right until you find the **[PMCMNT]** soft key. Press it once.
7) Navigate to the right until you find the **[Data]** soft key. Press it once.
8) Press the **[OPRT]** soft key followed by the **[Zoom]** soft key.
9) Update the tool # of the tool that was mounted on the spindle under Data for address number D 00000.

XIV. Coolant System Operation

The machine is equipped with a coolant system which consists of the following components:

1) 10 gallon coolant reservoir.
2) 115 V @ 60 Hz, 1/20 hp pump.
3) Chip Collector.
4) Adjustable flow valve.
5) Hoses to and from the machine.
6) Any-which-way coolant hose with one round and one flat nozzle mounted on the spindle.

All the internal components will be fitted by the manufacturer. The external components such as hoses and hose clamps must to be attached by the user. Once the hoses have been attached, they do not need to be removed unless they need to be exchanged.

It is recommended that the coolant of choice be semi-synthetic and designed to work best for the material to be cut by the machine. There are some fully synthetic coolants that can be corrosive towards plastic parts such as O-rings located on many components of the machine which is why the use of synthetic coolants is not recommended.

The coolant system is turned on and off directly from the operator's panel, or via the commands M08 and M09 through the machine control's MDI.

Please follow the procedure below to operate the coolant system.

1) Select a manual mode in the operator's panel (Jog, Handle, Ref).
2) Press the 

button in the operator's panel to activate the coolant (LED should turn on).
3) Press the 

button again in the operator's panel to deactivate the coolant (LED should turn off)

5. Maintenance

Never perform any maintenance work on the machine while it is powered on unless it is required. If power is required, press the emergency button and tag out the machine before performing any maintenance or inspection work on the machine.

I. APC warning and "DS0300 APC alarm: Need Ref Return"

This machine is equipped with absolute encoders which means that they will remember their position even if the machine's power is turned off. This is accomplished by a battery pack (located in the front of the machine next to thhe coolant power connection) which is connected to one of the servo drives located inside the machine's main electrical bay area.

If the battery is running low on power, the CNC screen will flash an "APC" message with yellow background. At this point, the power on the machine should stay on until the batteries have been replaced.

Should the battery die before it is replaced, the position of each servo will be lost and the alarms "DS0300 APC alarm: Need Ref Return" and "DS0306 APC Alarm: Battery Voltage 0" will be shown on the CNC screen for each axis.

The battery pack uses four D cell type batteries which are easily replaceable.

CAUTION!

The following procedure must be used in order to correctly set each servo's Home Position.

If the batteries are being replaced due to the flashing APC warning denoted by the letters APC with a yellow background on the CNC screen, and no alarms (DS0300 or DS0306) have been issued by the CNC control, only follow steps 2-5 without turning off the power to the machine.

If the alarms DS0300 and DS0306 have been issued by the CNC control, follow the entire procedure.

The following procedure should be done by a qualified technician.

1) Follow the Shut Off procedure, disconnect the power cord and tag it out.
2) Remove the electronics bay plastic cover inside the machine's modular stand.

3) Locate the battery pack mounted on the left most servo drive (Battery pack will be hidden by a grey cover)
4) Replace the battery pack (P/N A98L-0031-0025)
5) Place the electronics' bay plastic cover back inside the machine's modular stand.
6) Plug the power cord into 110 VAC and turn on the machine.
7) Once booted up, release the E-stop button.
8) Move the machine on the negative X-axis until the measurement between the end of the top linear guide and the linear block is 66 mm as it is shown on Image 1 at the end of these instructions.
9) Select 

mode.
10) Press the 

function key on the MDI panel.
11) Press the **[SETTINGS]** soft key.
12) Input a **1** on the **Parameter Write** option.
13) Press the 

key on the MDI panel.
14) Using the right arrow soft key, search for the **[PARAM]** soft key**.**
15) Write **1815** using the number keys.
16) Press the **[SEARCH]** soft key.
17) Using the arrow keys, highlight bit #4 **(APZ)** in the X axis**.**
18) Input a number **1.**
19) Press the 

key.
20) Activate the E-stop button.
21) Reboot the machine.
22) Repeat steps 7 through 21 for both the Y and Z axis using 225 mm for the Y axis distance and 22 mm for the Z axis. (Refer to Images 2 and 3 below)
23) The axis reference position alarm should no longer appear.

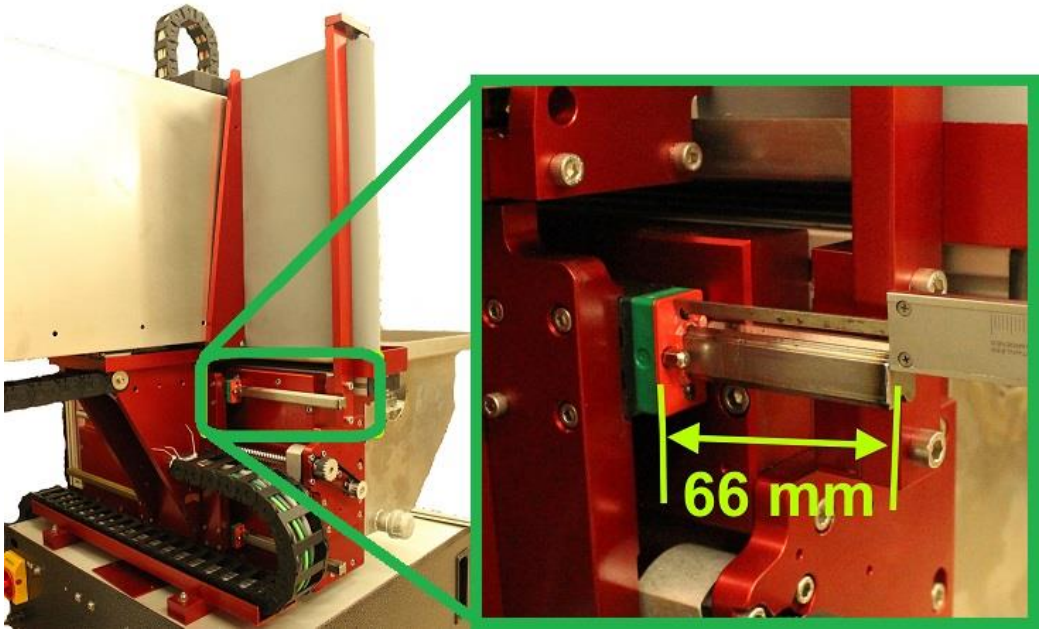

Image 1. Setting the X-axis home position

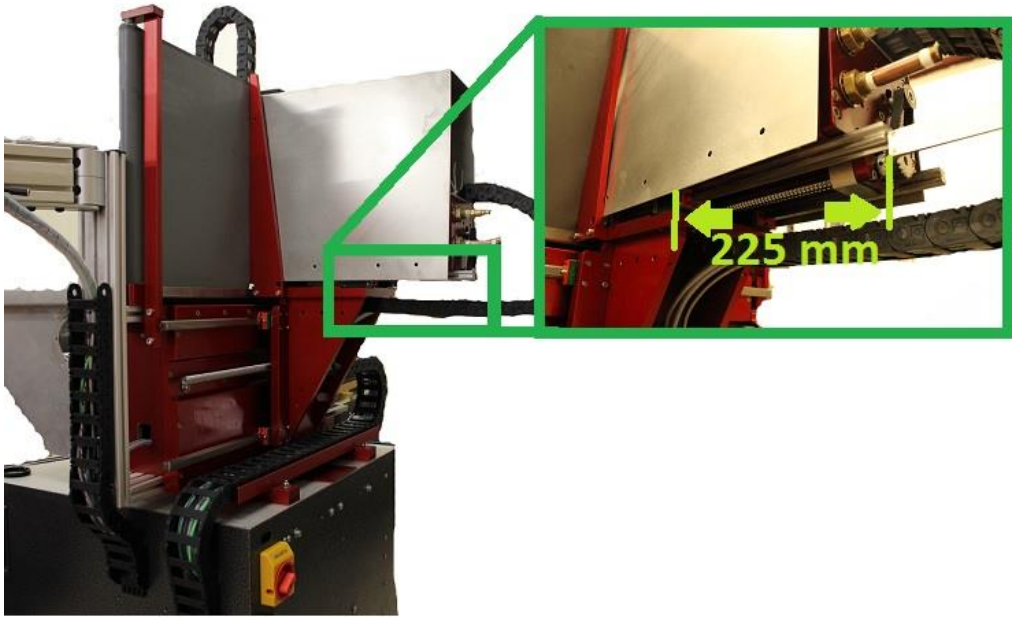

Image 2. Setting the Y-axis home position

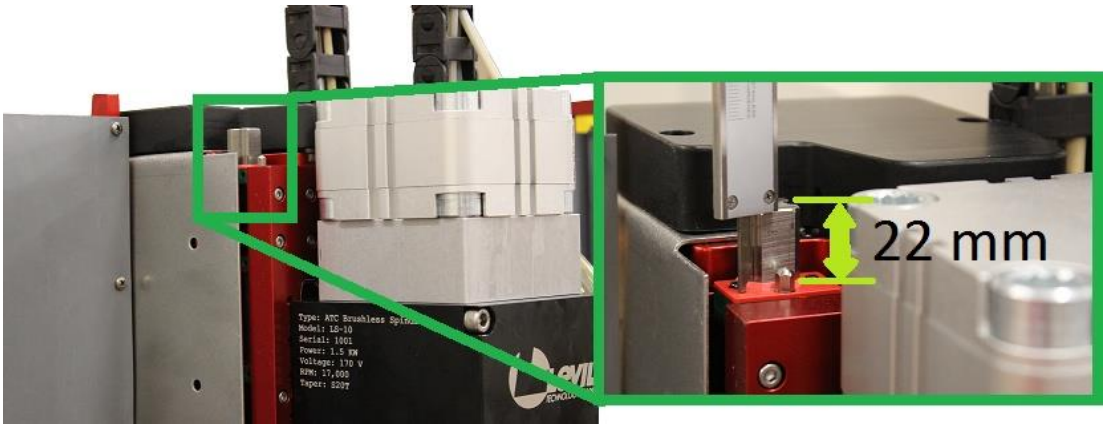

Image 3. Setting the Z-axis home position.

II. Referencing the Tool Rack Home Position

If the tool rack is moved either for maintenance reasons or due to a crash, the tool-rack's home position needs to be re-set. The home position is measured from the center of the position of T1. Please follow the procedure below to ensure proper alignment of the tool rack.

1) Attach a dial indicator to the spindle head/Z-axis linear guide ways (if using a magnetic base)
2) Measure the right side of the tool rack and adjust its position until there is less than 0.1 mm (0.004") of error between T1 and the last tool on the same row.
3) Tighten the screws of the tool rack and re-measure.
4) Remove the indicator and place an S20T tool holder inside the spindle.
5) Manually move the machine to center the tool holder with the position of T1 in the X and Y axis.
6) Move down in increments of 0.1 mm (0.01") on the Z axis until the tool holder begins to push down on the tool rack, then move up 0.5 mm or 0.01"
7) Select 

mode in the operator's panel
8) Press the 

function key on the MDI panel
9) Press the **[SETTING]** soft key
10) Input a **1** on the **Parameter Write** option
11) Press the 

key on the MDI panel
12) Using the right arrow soft key, search for **[PARAM]**
13) Write **6031** using the number keys
14) Press the **[SEARCH]** soft key
15) Change the value of **900** to **0**
16) Press the 

function key on the MDI panel
17) Use the right arrow soft key and search for **[MACRO]**
18) Write **900** using the number keys
19) Press the **[SEARCH]** soft key
20) Update macro 901 with the current Z axis machine position plus 50 mm
21) Update macro 902 with the current Z axis machine position
22) Update macro 904 with the current X axis machine position
23) Update macro 905 with the current Y axis machine position

24) Press the 

key on the MDI panel
25) Using the right arrow soft key, search for **[PARAM]**
26) Write **6031** using the number keys
27) Press the **[SEARCH]** soft key
28) Change the value of **0** to **900**
29) Press the 

function key on the MDI panel
30) Press the **[SETTING]** soft key
31) Input a **0** on the **Parameter Write** option
32) Press the 

key

The tool rack is now ready to be tested. Automatic tool changes between T1, T9 and T11 should be done to make sure that the alignment of the tool rack is correct.

III. Ball Screw Lubrication Procedure

The ball screw nut requires lubrication to maintain proper friction between the bearings and the ball screw. The ball screw nut is surrounded by a liquid absorbent material on both openings of the ball screw nut base which is soaked in oil during the machine assembly process and will maintain the ball screws lubricated for a while before they require lubrication again.

Re-lubrication of the oil absorbent material should be done every 1 to 2 weeks when the machine is in use daily. If the machine will sit idle for long periods of time, a coating of oil should be applied every time the ball screw feels dry.

To re-lubricate, add a coat of oil (lithium based, 30-140 cst, ISO 32-100) all over the ball screw and slowly move the axis back and forth throughout its entire travel length so the oil absorbent material can soak in the oil. Fast movement will cause the oil to fly all over. After the process is done, clean up the excess oil.

IV. Linear Guide Way Lubrication Procedure

Linear guide way lubrication is important for maintaining the function of linear guide ways. If the lubrication is not sufficient, the frictional resistance at rolling area will increase and the service life will be shortened as a result of wear of rolling parts.

There are four linear blocks per axis on the X, Y, and Z axis. Each linear block has a fitting located on one of its sides. Access to the fittings requires little or no removal of machine parts. They are all visible without the removal of any components.

Two primary lubricants are both grease and oil used for motion systems. Grease lubrication should be done with a lithium based grease No. 2 and should be applied every 100 Km of travel. Moving each axis for 150 mm back and forth after the grease has been applied to all four linear blocks will ensure proper distribution of the grease.

Oil lubrication should be done with an oil of viscosity 30-150 cst in intervals of 1 to 2 weeks when the machine is used daily.

V. Servo Adjustment

The servo motors for the X and Z axes are positioned in a direct drive configuration attached to the ball screws by a shaft coupling. If the machine is commanded to move but it is noticed that the actual distance moved is less, or the home position of the machine seems to be changing, it could mean that the servo or ball screw is slipping inside the coupling. Check to make sure that the shaft coupling is tightened on both sides (servo and ball screw) to make sure that neither shaft keeps slipping.

The home position will need to be reset for the axis in question. Please follow the **APC warning and "DS0300 APC alarm: Need Ref Return"** section to safely set up the home position.

VI. Cleaning the Machine

Do not use gasoline or any other flammable solutions to clean the outside of the machine. Utilizing the machine's own coolant for cleaning the work area is recommended.

Caution! If the coolant is aimed directly in between the plastic cover and the stainless steel tub, the coolant can overflow from under the plastic cover. The same applies to the rolling curtains and the stainless steel tub.

Keep the tools and spindle taper clean, failure to do so may result in a misaligned tool or the spindle not being able to pick up the tool.

The rolling curtains should be cleaned of debris weekly to ensure a long working life. To clean the curtains, move the machine to its X-axis travel limits (both positive and negative) and remove the chips/debris that has accumulated in the front and back sides.

The chips that accumulate in the stainless steel tub can be removed in two ways. Using a wet/dry vacuum with a small nozzle to remove most of the chips that have accumulated under the work table is the easiest and cleanest way. You can also remove the mesh material located on the right side of the stainless steel tub and allow the coolant to run and slowly remove all the chips under the work table. **Caution!** The exit nozzle has a small opening and can become clogged if too much material or big pieces are allowed to flow through the nozzle. The chips will be collected by the strainer located on the coolant reservoir. **Caution!** The strainer has a small area to collect the chips and can overflow quickly, unless cleaned periodically.

VII. Coolant system

The coolant must be kept at a certain concentration range. Ask your coolant provider for specifications. Coolant must be replaced at least once or twice a year or in accordance to the manufacturer specifications.

If the coolant system will not be used over a long period of time, the coolant pump should be taken out of the coolant and placed in a tub with clean water. Have it run for a couple of minutes to ensure the coolant is completely removed from inside the pump. Coolant left inside the pump while it is sitting idle may dry and cause the pump to stop working properly.

VIII. Wiring Diagrams

The wiring in this machine is divided between three sections. The first area is the Main Electronics Bay which is located on the left side of the machine behind an access panel. It contains the main power controls and the servo drives for the FANUC control. The second area is located inside the FANUC control case where the control, operator panel and input/output module is located. The third area is the upper electronics bay and is located on the top of the machine, behind the spindle head. This area contains the spindle driver and ATC (automatic tool change) controls.

The following diagrams represent the wiring schematics of the machine.

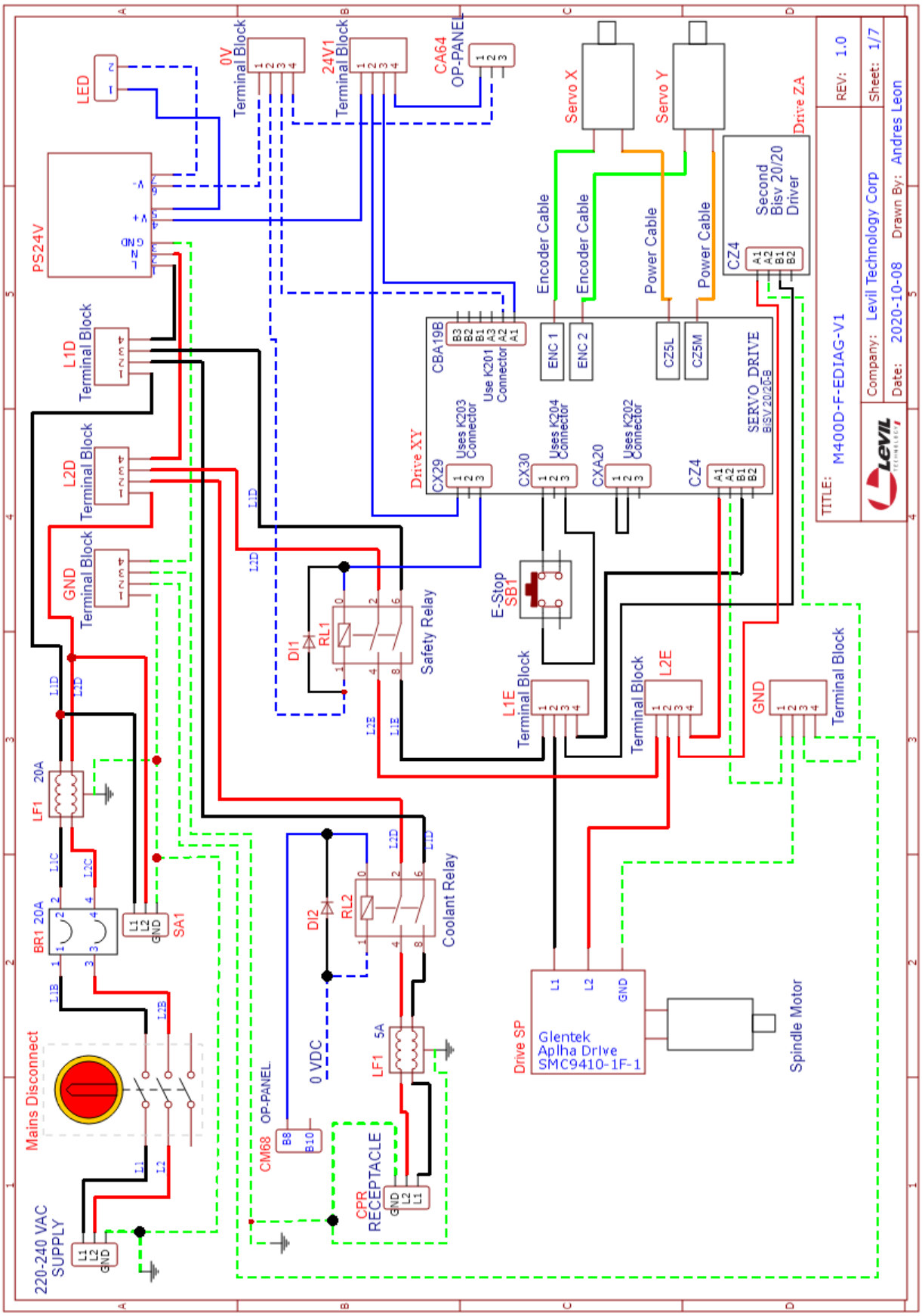
LED
PS24V
0V
Terminal Block
24V1
Terminal Block
CA64
OP-PANEL
Servo X
Servo Y
Drive ZA
Second
Bisv 20/20
Driver
CZ4
Encoder Cable
Encoder Cable
Power Cable
Power Cable
L1D
Terminal Block
L2D
Terminal Block
GND
Terminal Block
CBA19B
Use K201
Connector
ENC 1
ENC 2
CZ5L
CZ5M
Drive XY
CX29
Uses K203
Connector
CX30
Uses K204
Connector
CXA20
Uses K202
Connector
CZ4
SERVO_DRIVE
BISV 20/20-B
TITLE:
M400D-F-EDIAG-V1
REV: 1.0
Sheet: 1/7
Company: Levil Technology Corp
Date: 2020-10-08
Drawn By: Andres Leon
E-Stop
SB1
DI1
RL1
Safety Relay
L1E
Terminal Block
L2E
Terminal Block
GND
Terminal Block
LF1 20A
BR1 20A
SA1
DI2
RL2
Coolant Relay
LF1 5A
0 VDC
OP-PANEL
CM68
CPR
RECEPTACLE
Mains Disconnect
220-240 VAC
SUPPLY
Drive SP
Glentek
Aplha Drive
SMC9410-1F-1
Spindle Motor

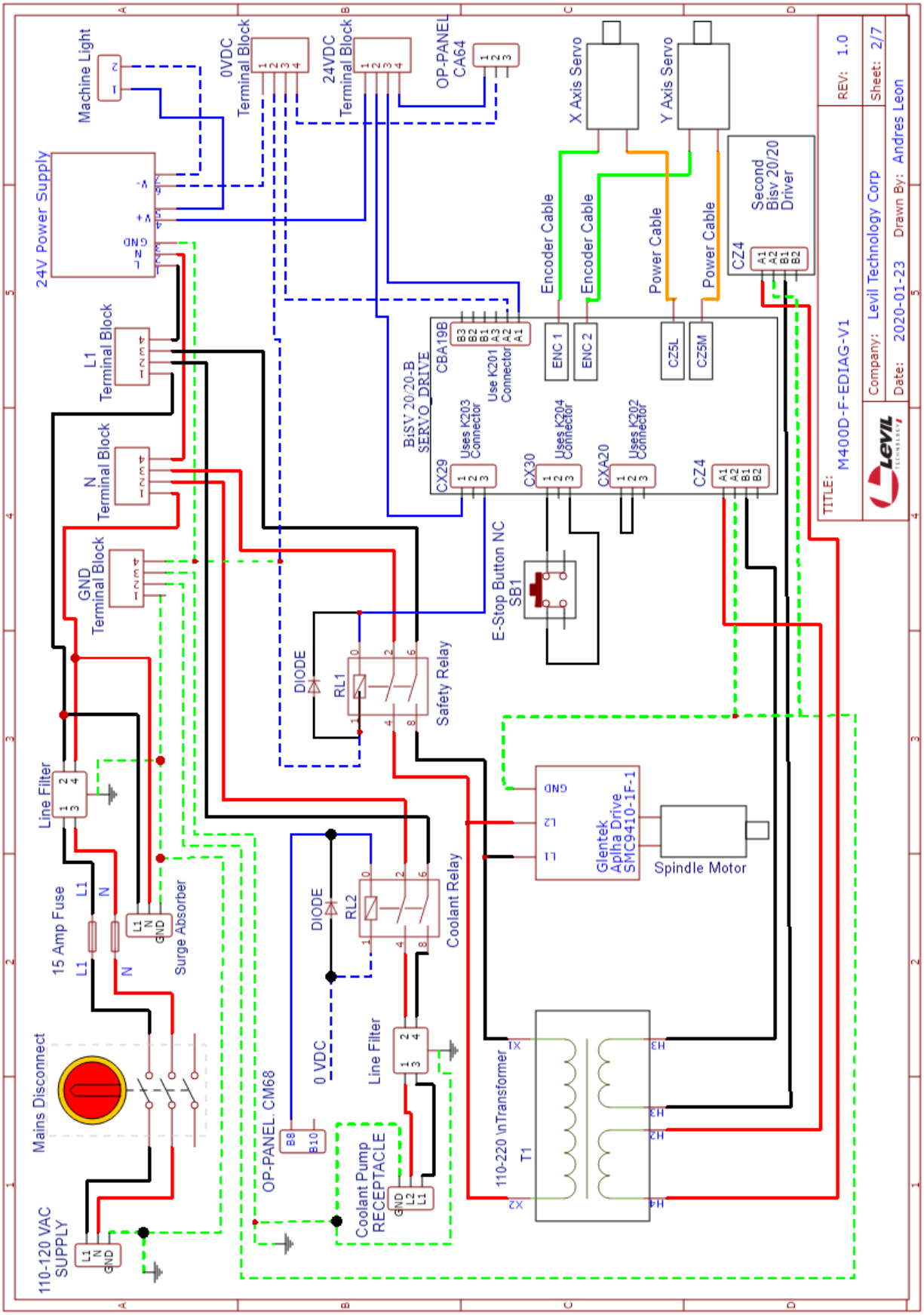
Machine Light
0VDC Terminal Block
24VDC Terminal Block
OP-PANEL CA64
X Axis Servo
Y Axis Servo
24V Power Supply
Encoder Cable
Encoder Cable
Power Cable
Power Cable
Second Bisv 20/20 Driver
CZ4
L1 Terminal Block
N Terminal Block
GND Terminal Block
BiSV 20/20-B SERVO DRIVE
CBA19B
Use K201 Connector
Uses K203 Connector
Uses K204 Connector
Uses K202 Connector
CX29
CX30
CXA20
CZ4
ENC 1
ENC 2
CZ5L
CZ5M
E-Stop Button NC SB1
DIODE
RL1
Safety Relay
Line Filter
15 Amp Fuse
Surge Absorber
Mains Disconnect
110-120 VAC SUPPLY
DIODE
RL2
Coolant Relay
0 VDC
Line Filter
OP-PANEL. CM68
Coolant Pump RECEPTACLE
Glentek Aplha Drive SMC9410-1F-1
Spindle Motor
110-220 \nTransformer
T1
TITLE:
M400D-F-EDIAG-V1
REV: 1.0
Company: Levil Technology Corp
Sheet: 2/7
Date: 2020-01-23
Drawn By: Andres Leon

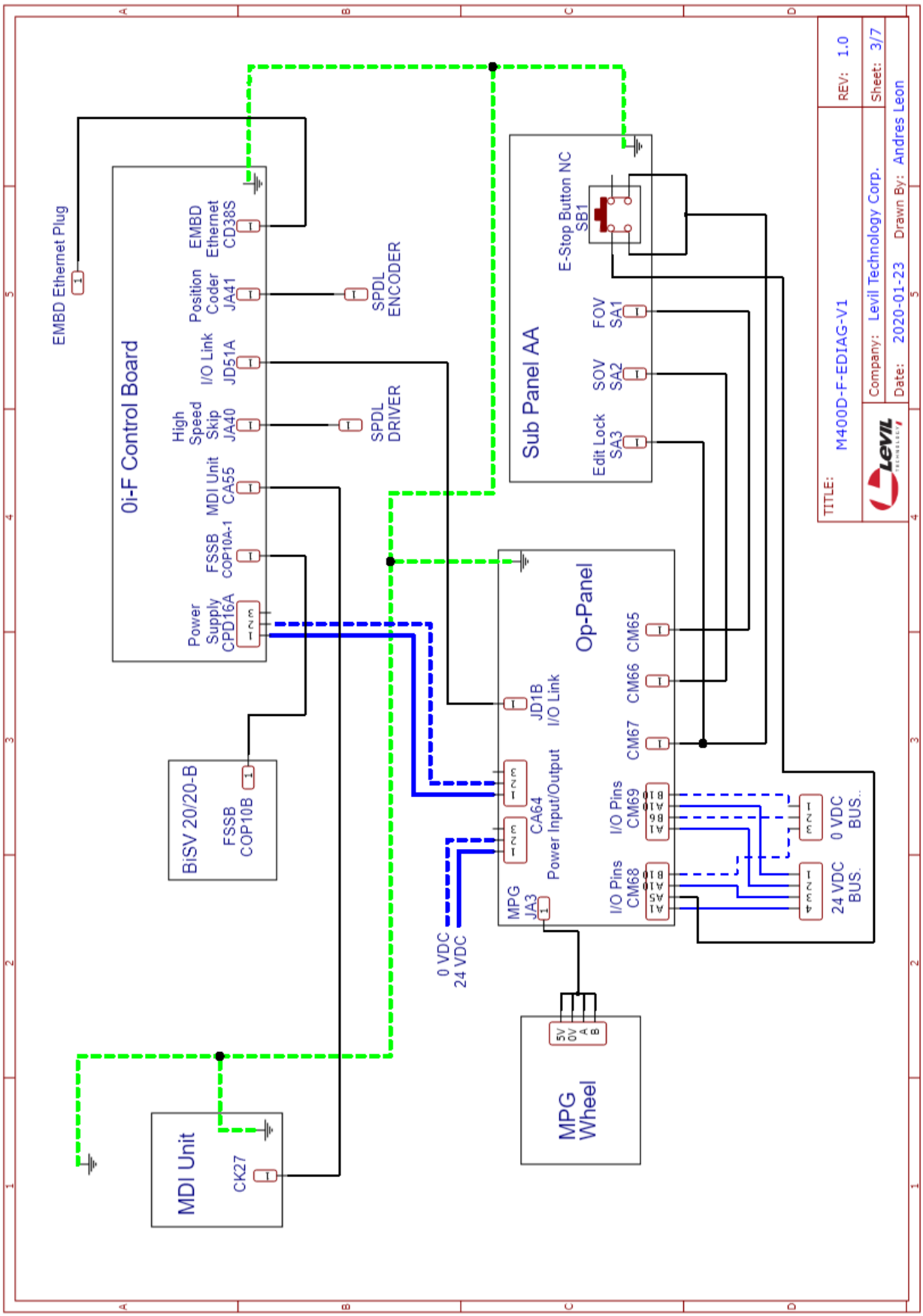
EMBD Ethernet Plug
0i-F Control Board
Power Supply CPD16A
FSSB COP10A-1
MDI Unit CA55
High Speed Skip JA40
I/O Link JD51A
Position Coder JA41
EMBD Ethernet CD38S
SPDL ENCODER
SPDL DRIVER
BiSV 20/20-B
FSSB COP10B
MDI Unit
CK27
Sub Panel AA
E-Stop Button NC SB1
Edit Lock SA3
SOV SA2
FOV SA1
Op-Panel
JD1B I/O Link
CA64 Power Input/Output
MPG JA3
I/O Pins CM68
I/O Pins CM69
CM67
CM66
CM65
0 VDC 24 VDC
24 VDC BUS.
0 VDC BUS..
MPG Wheel
5V 0V A B
TITLE:
M400D-F-EDIAG-V1
REV: 1.0
Company: Levil Technology Corp.
Sheet: 3/7
Date: 2020-01-23
Drawn By: Andres Leon

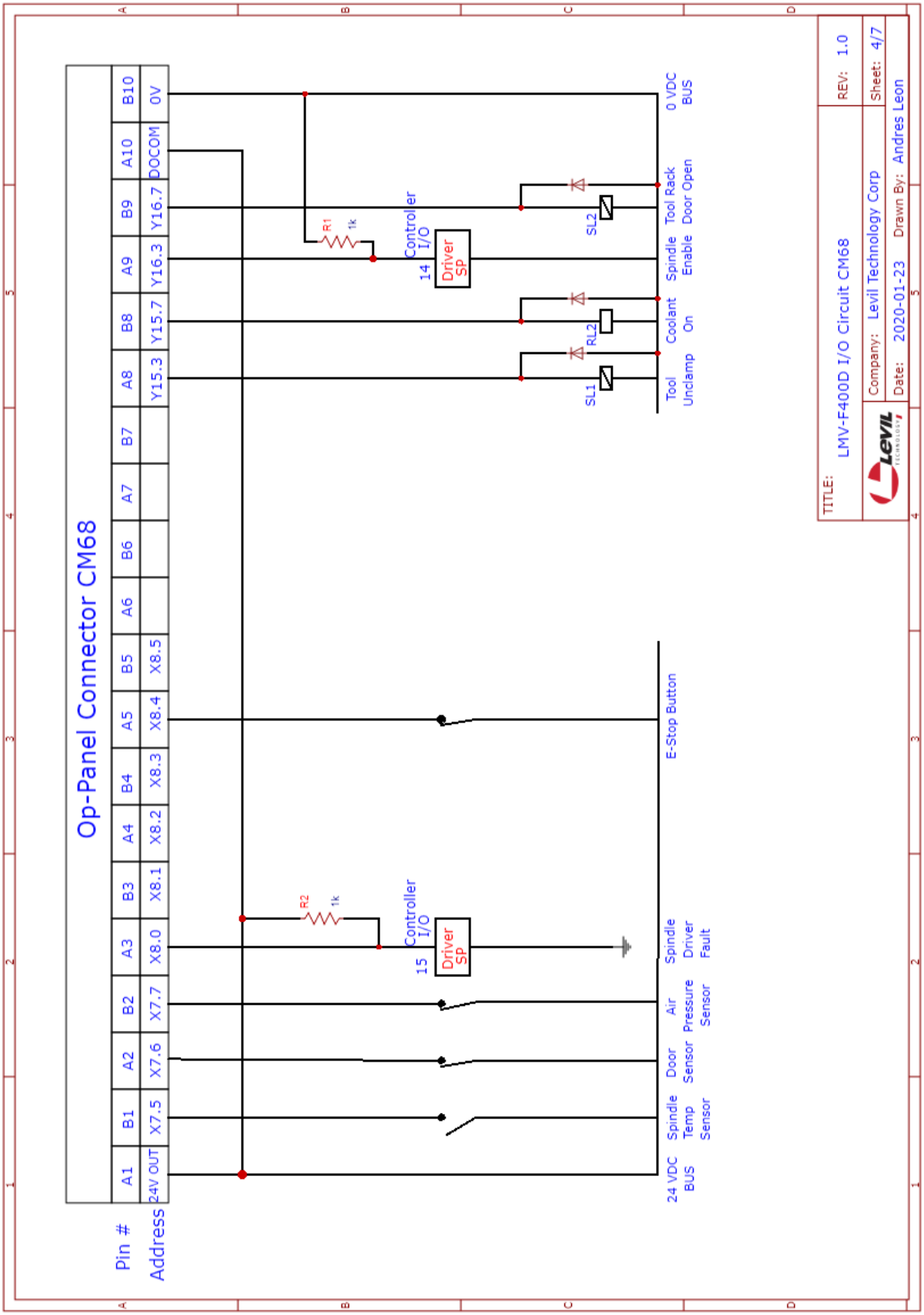
Op-Panel Connector CM68
Pin #
Address
A1 B1 A2 B2 A3 B3 A4 B4 A5 B5 A6 B6 A7 B7 A8 B8 A9 B9 A10 B10
24V OUT X7.5 X7.6 X7.7 X8.0 X8.1 X8.2 X8.3 X8.4 X8.5 Y15.3 Y15.7 Y16.3 Y16.7 DOCOM 0V
R1 1k
R2 1k
Controller I/O
14
15
Driver SP
SL1
RL2
SL2
0 VDC BUS
Tool Rack Door Open
Spindle Enable
Coolant On
Tool Unclamp
E-Stop Button
Spindle Driver Fault
Air Pressure Sensor
Door Sensor
Spindle Temp Sensor
24 VDC BUS
TITLE:
LMV-F400D I/O Circuit CM68
REV: 1.0
Company: Levil Technology Corp
Sheet: 4/7
Date: 2020-01-23
Drawn By: Andres Leon

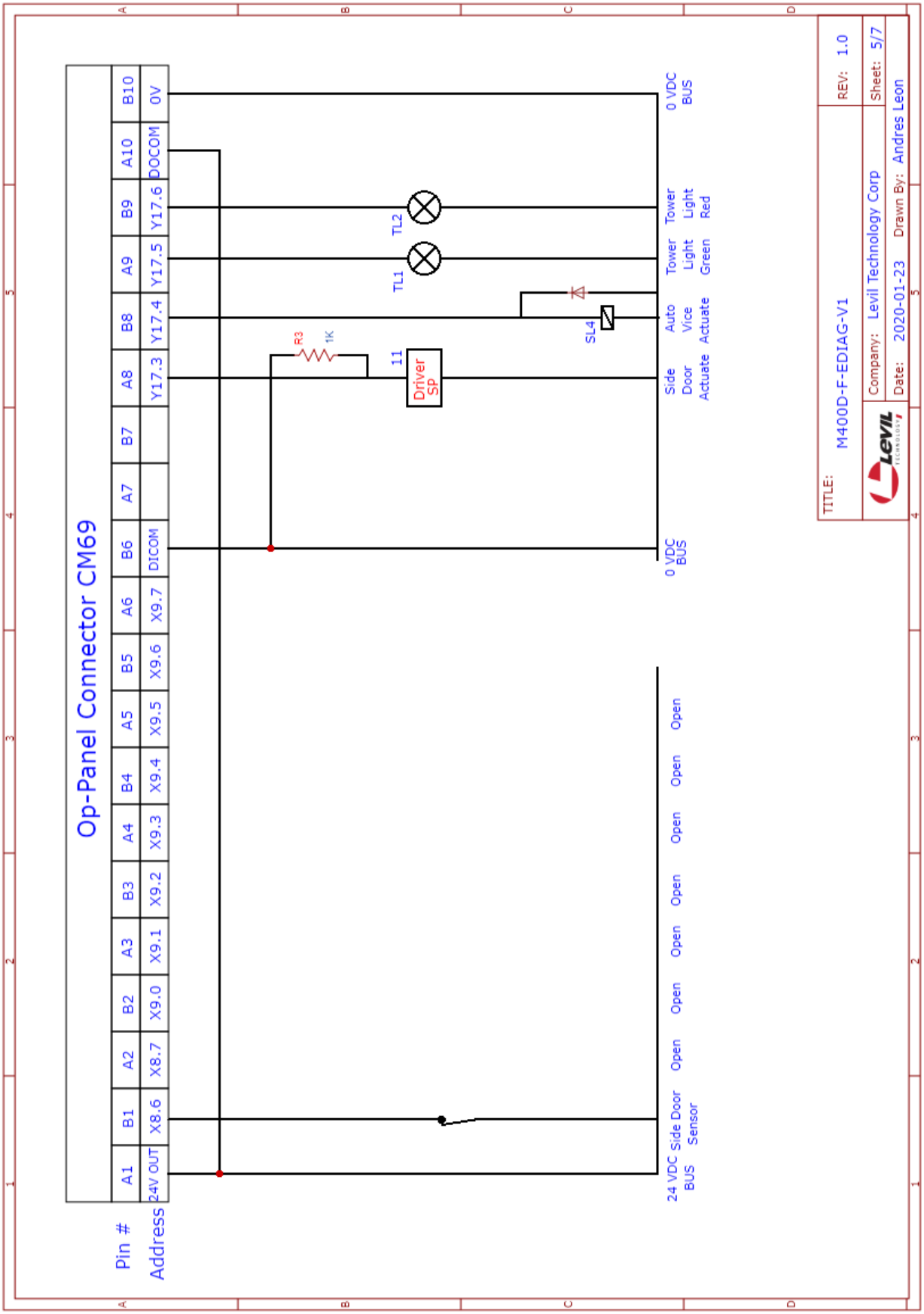
Op-Panel Connector CM69
Pin #
Address
A1 B1 A2 B2 A3 B3 A4 B4 A5 B5 A6 B6 A7 B7 A8 B8 A9 B9 A10 B10
24V OUT X8.6 X8.7 X9.0 X9.1 X9.2 X9.3 X9.4 X9.5 X9.6 X9.7 DICOM Y17.3 Y17.4 Y17.5 Y17.6 DOCOM 0V
R3
1K
11
Driver SP
TL1
TL2
SL4
24 VDC BUS
Side Door Sensor
Open
Side Door Actuate
Auto Vice Actuate
Tower Light Green
Tower Light Red
0 VDC BUS
TITLE:
M400D-F-EDIAG-V1
REV: 1.0
Company: Levil Technology Corp
Sheet: 5/7
Date: 2020-01-23
Drawn By: Andres Leon

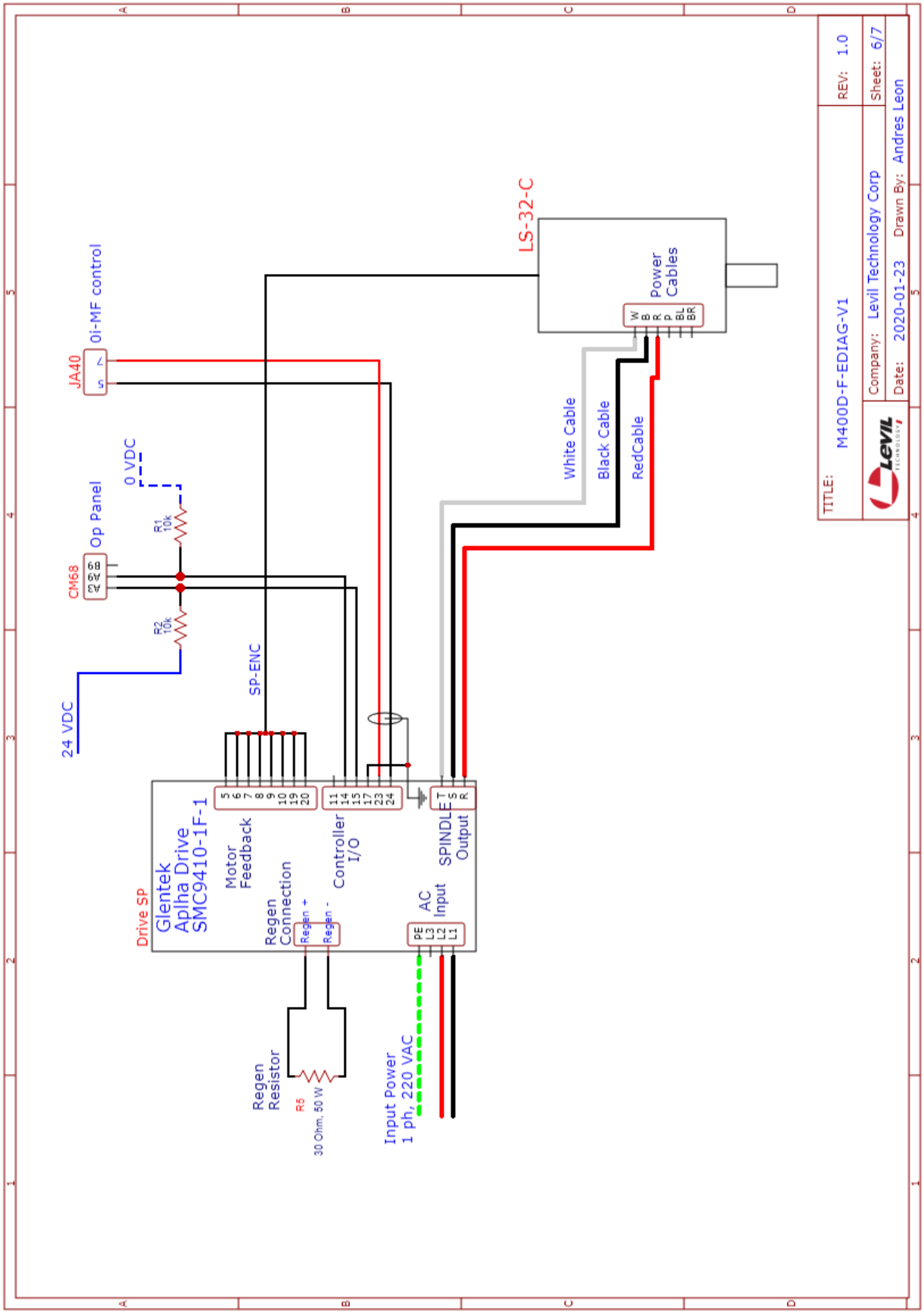
TITLE:
M400D-F-EDIAG-V1
REV: 1.0
Company: Levil Technology Corp
Sheet: 6/7
Date: 2020-01-23
Drawn By: Andres Leon
LS-32-C
Power Cables
W
B
R
P
BL
BR
White Cable
Black Cable
RedCable
JA40
Oi-MF control
7
5
0 VDC
Op Panel
CM68
B9
A9
A3
R1 10k
R2 10k
24 VDC
SP-ENC
Drive SP
Glentek Aplha Drive SMC9410-1F-1
Motor Feedback
5 6 7 8 9 10 19 20
Controller I/O
11 14 15 17 23 24
SPINDLE Output
T S R
Regen Connection
Regen +
Regen -
AC Input
PE L3 L2 L1
Regen Resistor
R5
30 Ohm, 50 W
Input Power 1 ph, 220 VAC

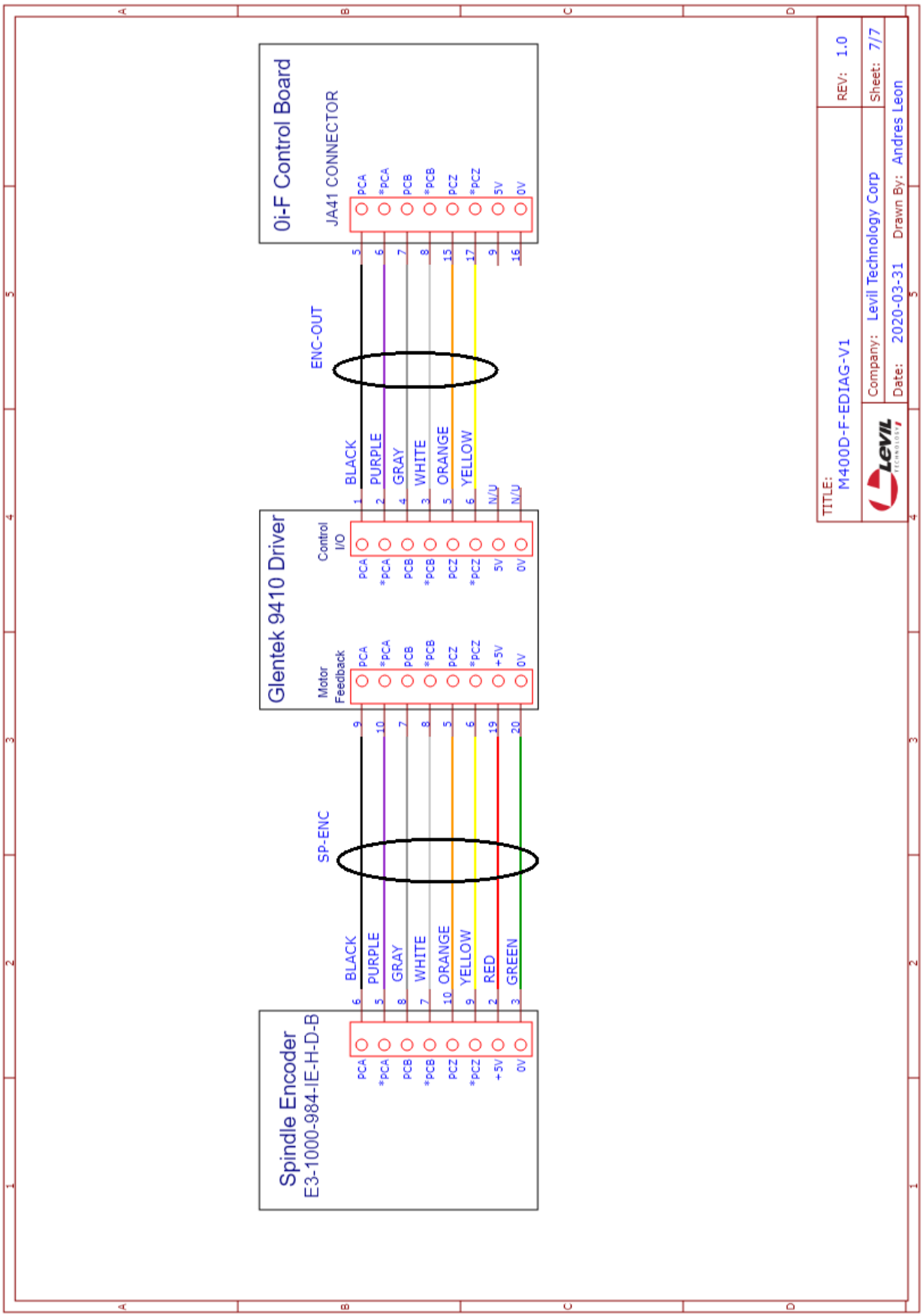
Spindle Encoder
E3-1000-984-IE-H-D-B
PCA
*PCA
PCB
*PCB
PCZ
*PCZ
+5V
0V
BLACK
PURPLE
GRAY
WHITE
ORANGE
YELLOW
RED
GREEN
SP-ENC
Glentek 9410 Driver
Motor Feedback
Control I/O
N/U
ENC-OUT
0i-F Control Board
JA41 CONNECTOR
5V
TITLE:
M400D-F-EDIAG-V1
REV: 1.0
Company: Levil Technology Corp
Sheet: 7/7
Date: 2020-03-31
Drawn By: Andres Leon